Pos.	Page	Name
1	3_6_1	PNEUMATIC LOCKS FOR DOOR LEAVES
2	3_6_2	SETS OF MECHANICAL LOCKS - WEDGES
3	3_6_3	MECHANICAL LOCKS OF DOOR LEAF - WEDGES

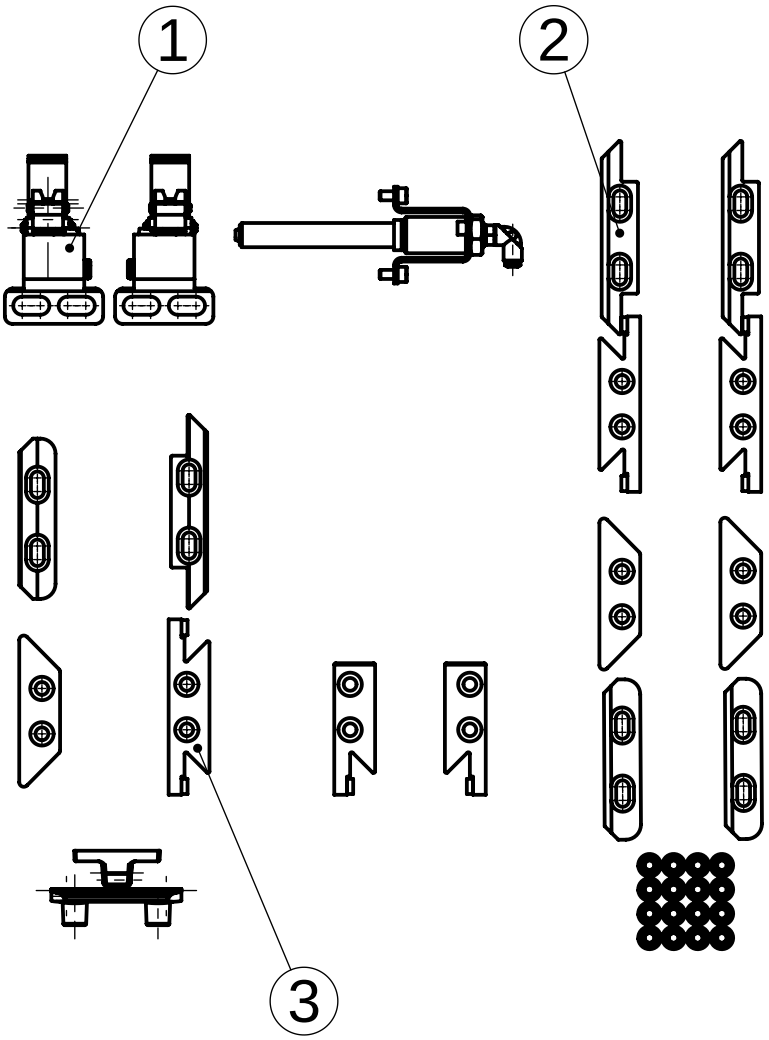

Type:	Door leaf locks
Function:	Securing the door leaf during travel in closed position
Environment temperature:	-40ÁC ağ +60ÁC
Working position:	Any

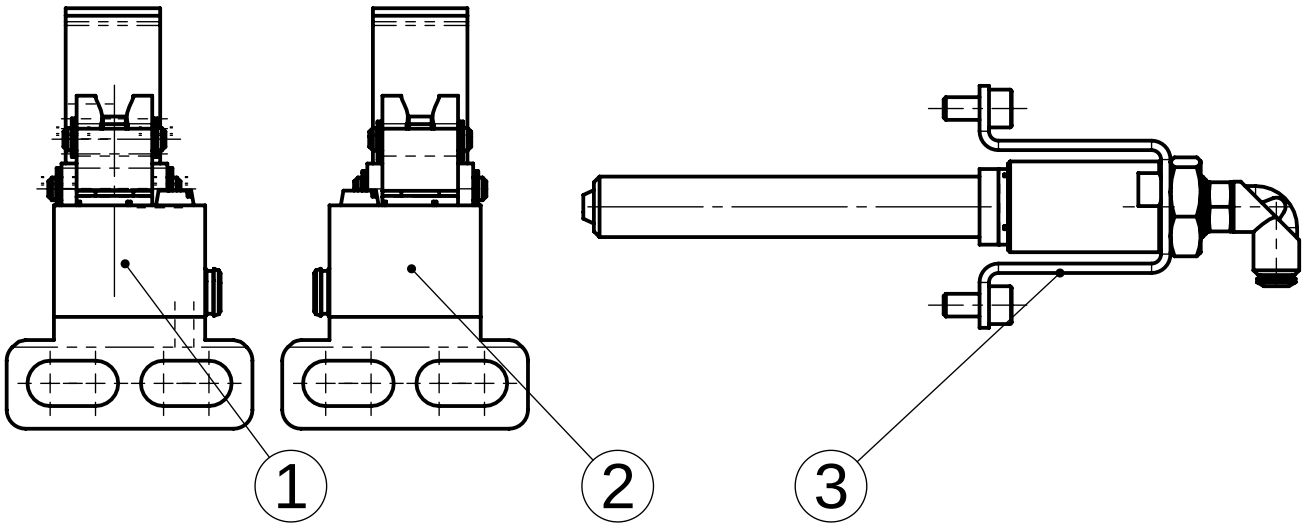

Pos.	Page	Ord. Nr.	Name
1	3_6_1_1	23410162	LEFT LOCK ZAM2 L
2	3_6_1_2	23410163	RIGHT LOCK ZAM2 P
3	3_6_1_3	23412778	PNEUMATICAL DOOR LOCK BG 20

Type:	Pneumatic locks for door leaves
Function:	Securing the door leaf during travel by means of pressure air
Medium connection:	Plastic tube 6/4
Working medium:	Filtered air, lubricated or non-lubricated
Nominal pressure:	0,8 MPa
Minimum pressure:	0,3 MPa
Maximum pressure:	1 MPa
Environment temperature:	-40ÁC to +60ÁC
Medium temperature:	0ÁC to +55ÁC
Working position:	Arbitrary

TOP LEVEL
LEVEL UP
PREV.
NEXT
NS EE XC T.

PNEUMATIC LOCKS FOR DOOR LEAVES

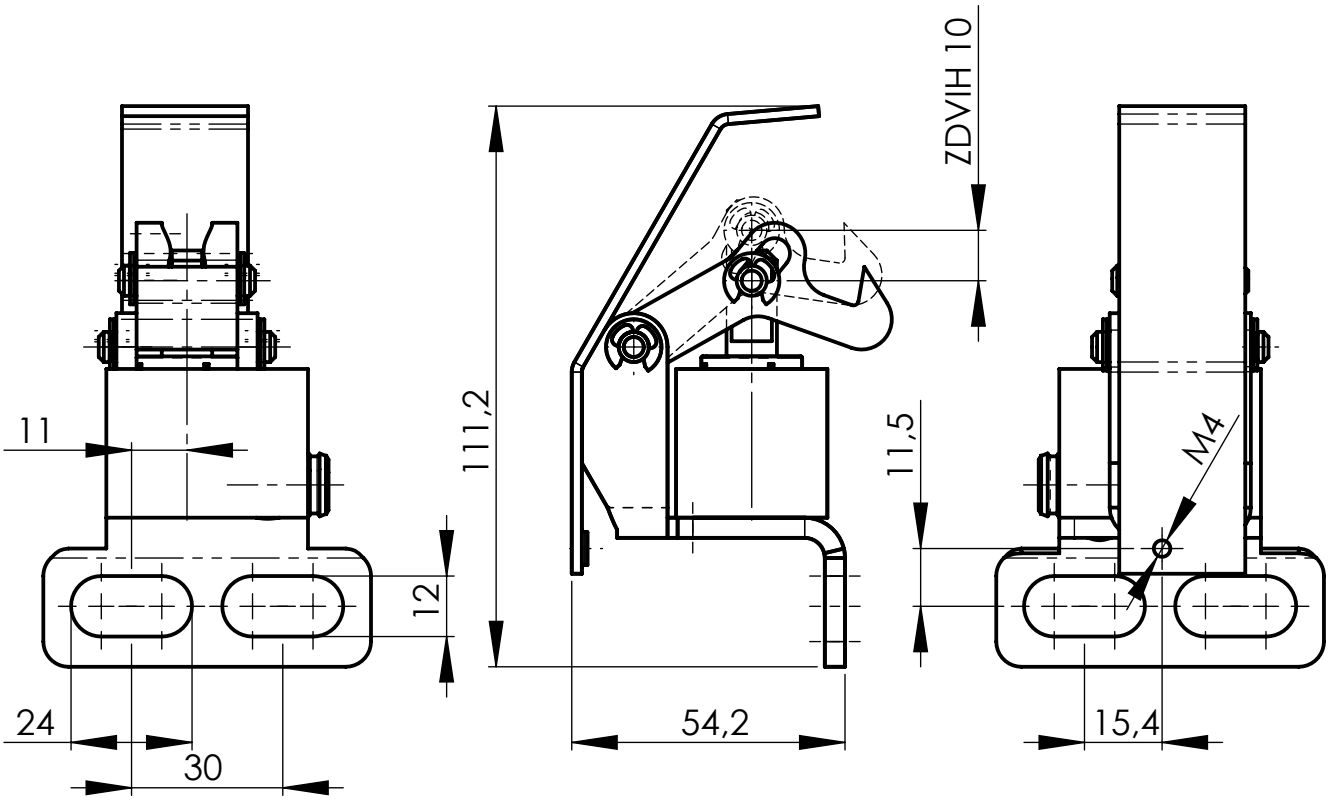

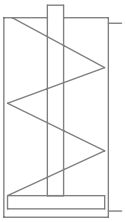

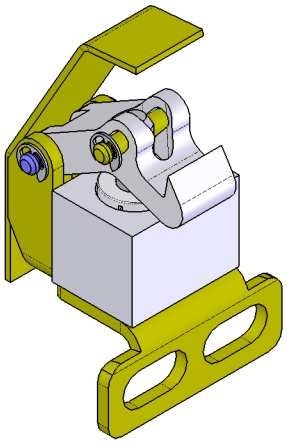

Type:	Door lock ZAM2 L
Function:	Securing the door leaf during travel by means of pressure air
Design:	Single-acting linear pneumatic motor with return spring, lever and holder
Connection:	Al alloys, stainless steel, zinc-plated steel grade 11, zincplated wire, plastics, oil resistant rubber
Connection:	2 screws M10 through holes in the holder, thread M4 for cover fastening
Medium connection:	Plastic tube 6/4
Pneumatic motor stroke:	10 mm
Pneumatic motor diam.:	20 mm

23410162 - LEFT LOCK ZAM2 L

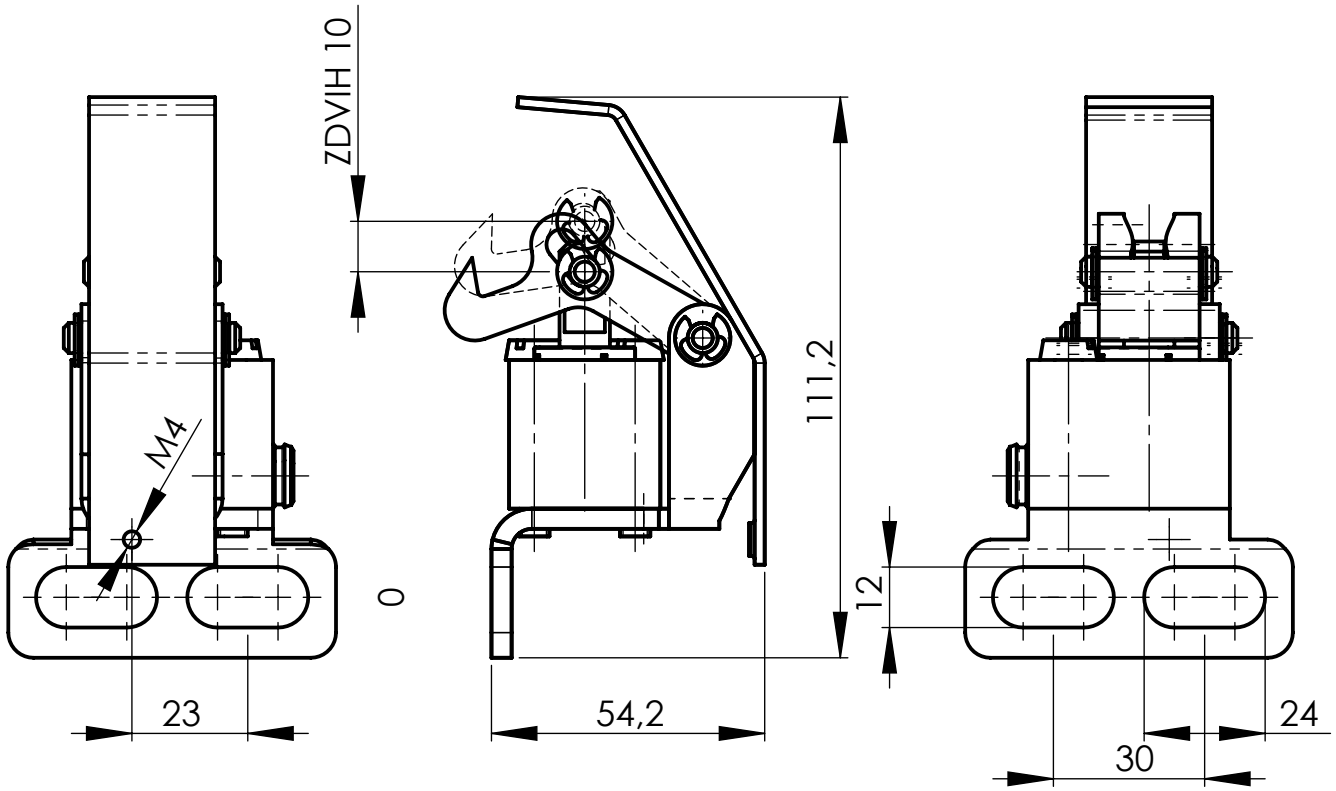

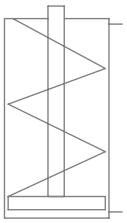

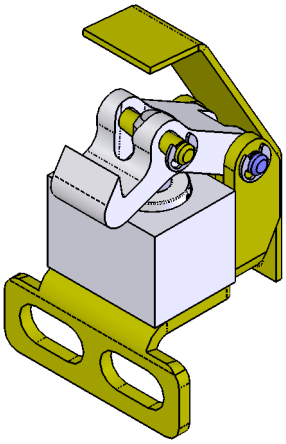

Type:	Door lock ZAM2 R
Function:	Securing the door leaf during travel by means of pressure air
Design:	Single-acting linear pneumatic motor with return spring, lever and holder
Connection:	Al alloys, stainless steel, zinc-plated steel grade 11, zincplated wire, plastics, oil resistant rubber
Connection:	2 screws M10 through holes in the holder, thread M4 for cover fastening
Medium connection:	Plastic tube 6/4
Pneumatic motor stroke:	10 mm
Pneumatic motor diam.:	20 mm

23410163 - RIGHT LOCK ZAM2 R

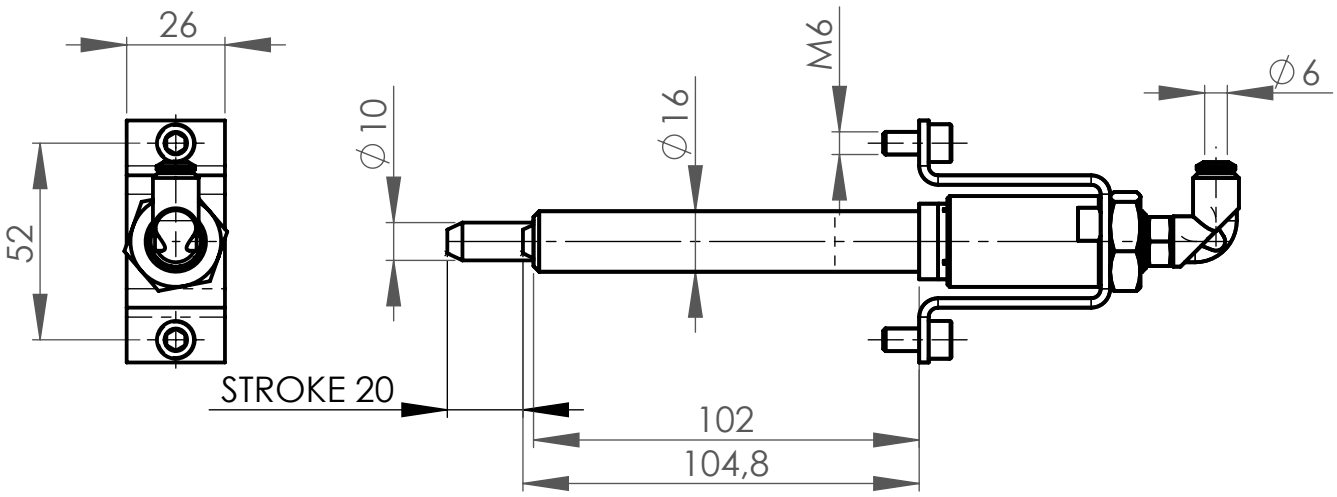

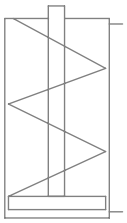

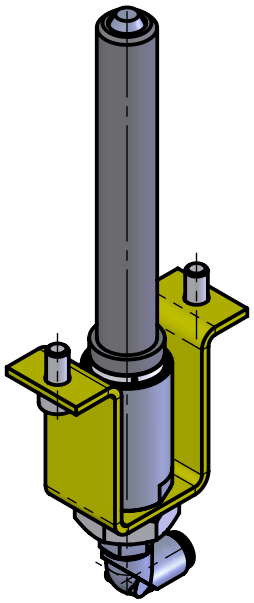

Type:	Door lock BG20
Function:	Securing the door leaf during travel by means of pressure air
Design:	Single-acting linear pneumatic motor with return spring, with securing pin
Connection:	Al alloys, stainless steel, zinc-plated steel grade 11, zincplated wire, plastics, oil resistant rubber
Connection:	2 screws M6 through holes in the holder,
Medium connection:	Plastic tube 6/4
Pneumatic motor stroke:	20 mm
Pneumatic motor diam.:	20 mm

Pos.	Ord. Nr.	Name	Pcs.
1	23411593	WEDGE 1	2
2	23411598	WEDGE 2	2
3	23411590	WEDGE 3	2
4	23411591	WEDGE 4	2
5	002-232-0080	WASHER 8	16
6	025-000-0840	SCREW M8x40	16

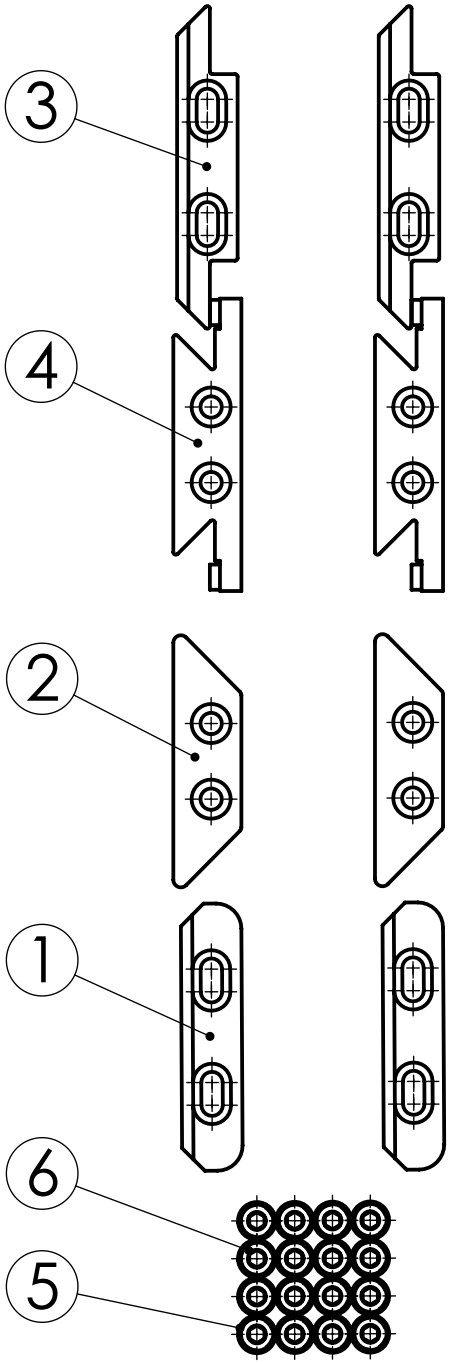

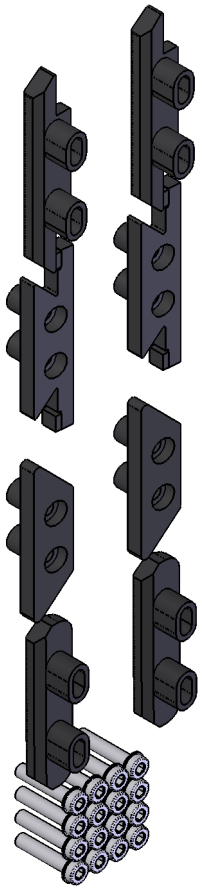

Type:	Set wedges
Function:	Securing the door leaf during travel by means of their shape (used in couple). Optimal combination of wedges. Screws for fastening.
Design:	Casting
Materials:	Cast iron, Zn alloy
Environment temperature:	-40°C to +60°C

23305868 - SET WEDGES

Pos.	Page	Name
1	3_6_3_1	WEDGE 1
2	3_6_3_2	WEDGE 2
3	3_6_3_3	WEDGE 3
4	3_6_3_4	WEDGE 4
5	3_6_3_5	LEAF WEDGE
6	3_6_3_6	UPPER WEDGE
7	3_6_3_7	WEDGE 5
8	3_6_3_8	WEDGE 6

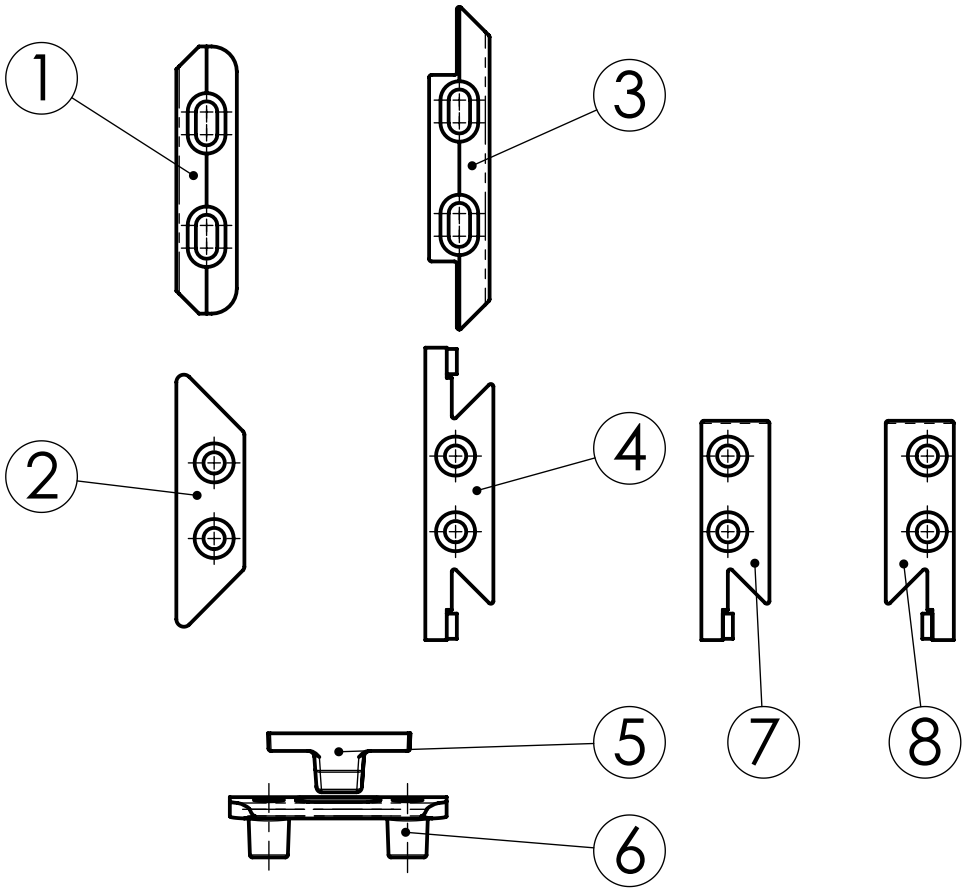

Type:	Wedges
Func:tion	Securing the door leaf during travel by means of their shape
Design:	Casting
Materials:	Cast iron, Zn alloy
Environment temperature:	-40ÁC to +60ÁC

TOP LEVEL
LEVEL UP
PREV. SECT.
PREV.
NEXT

MECHANICAL LOCKS OF DOOR LEAF - WEDGES

Supplied configurations					
Nr.	Ord. Nr.	Name	H [mm]	h [mm]	3D model
1	23410080	WEDGE 1 / 15	15	7	
2	23409800	WEDGE 1 / 21,5	21,5	15,3	
3	23411593	WEDGE 1 / 28	28	19,9	

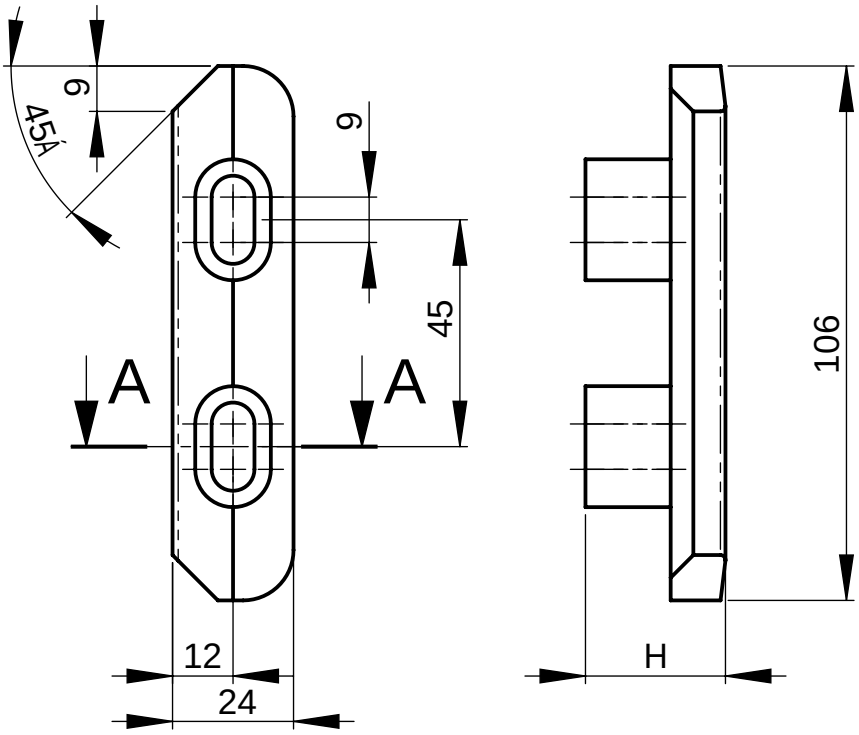

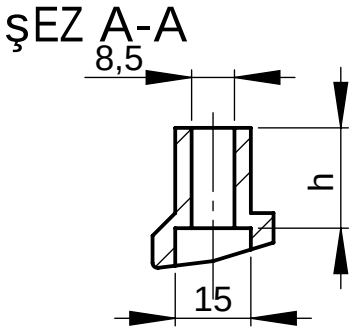

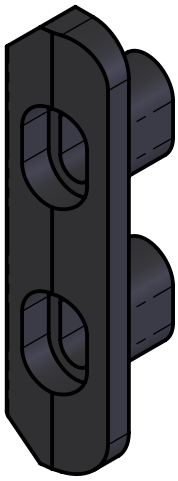

Type:	Wedge 1
Function:	Securing the door leaf during travel by means of shape (used in couple with Wedge 2 - 3_6_3_2)
Materials	Cast iron
Connection:	2x screw M8 throught the wedge body
Working position:	Vertical

TOP LEVEL
LEVEL UP
PREV.
NEXT

WEDGE 1

Supplied configurations					
Nr.	Ord. Nr.	Name	H [mm]	h [mm]	3D model
1	23410081	WEDGE 2 / 15	15	9,4	
2	23409801	WEDGE 2 / 17	17	11,4	
3	23411598	WEDGE 2 / 30,2	30,2	23,2	

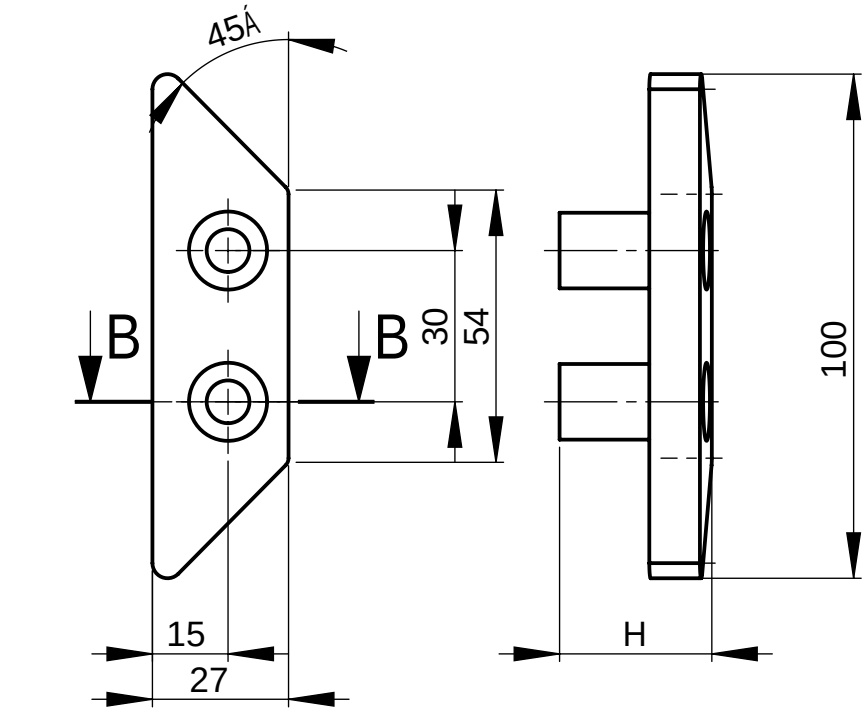

şEZ B-B

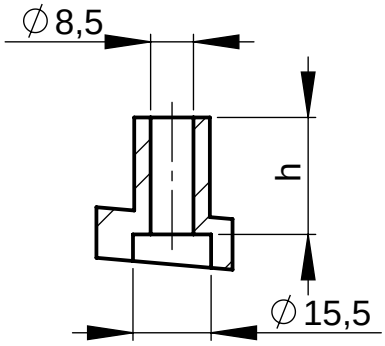

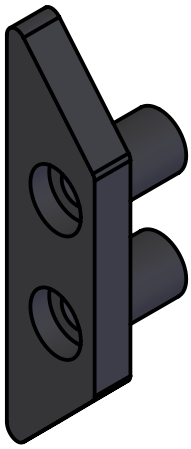

Type:	Wedge 2
Function:	Securing the door leaf during travel by means of shape (used in couple with Wedge 2 - 3_6_3_1)
Materials	Cast iron
Connection:	2x screw M8 throught the wedge body
Working position:	Vertical

TOP LEVEL
LEVEL UP
PREV.
NEXT

WEDGE 2

Supplied version					
Nr.	Ord. Nr.	Name	H [mm]	h [mm]	3D model
1	23410082	WEDGE 3 / 15	15	6,9	
2	23409802	WEDGE 3 / 21,5	21,5	13,5	
3	23411590	WEDGE 3 / 28	28	19,7	

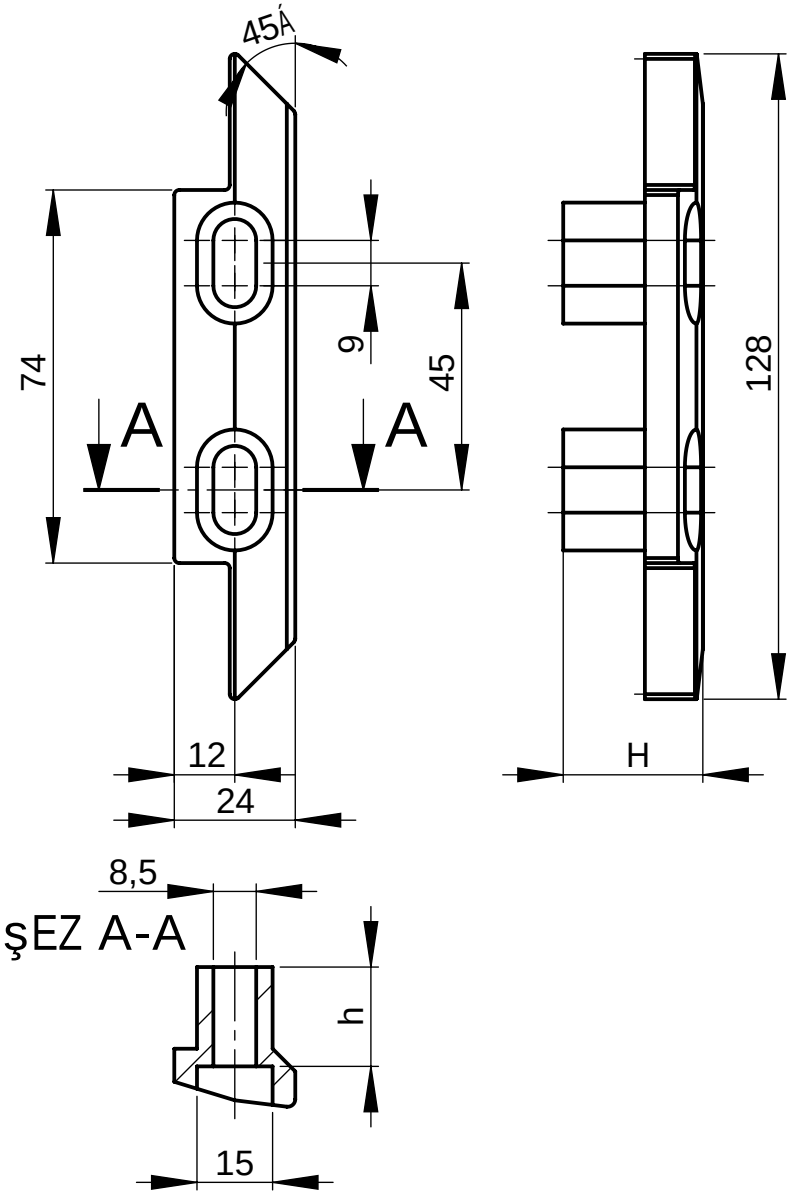

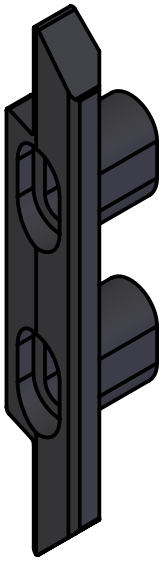

Type:	Wedge 3
Function:	Securing the door leaf during travel by means of shape (used in couple with Wedge 4 - 3_6_3_4)
Materials:	Cast iron
Connection:	2 screws M8 through the wedge body
Working position:	Vertical

TOP LEVEL
LEVEL UP
PREV.
NEXT

WEDGE 3

Supplied version						
Nr.	Ord. Nr.	Name	H [mm]	h [mm]	x [mm]	3D model
1	23409803	WEDGE 4 / 16	16	9	10,5	
2	23410083	WEDGE 4 / 16,5	16,5	9,5	10,5	
3	23411591	WEDGE 4 / 30,2	30,2	19,7	12	

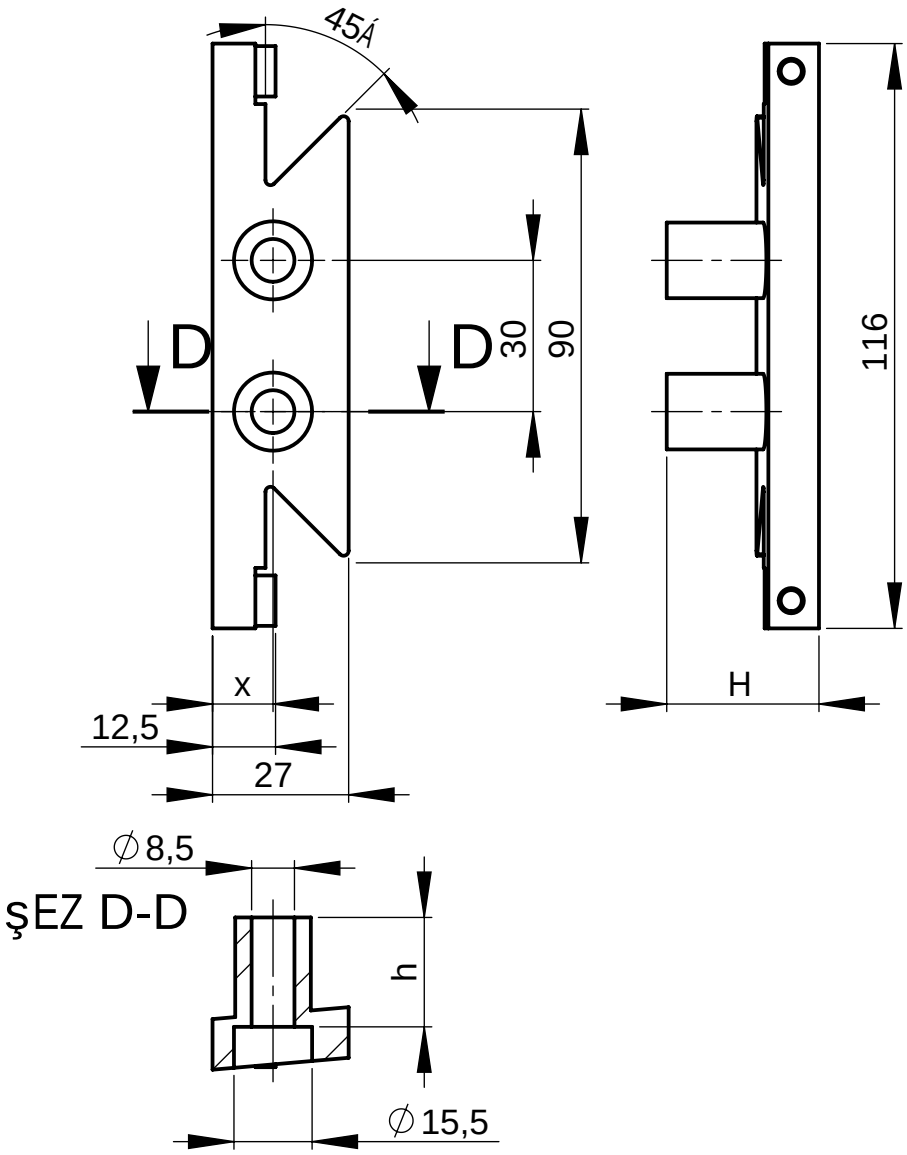

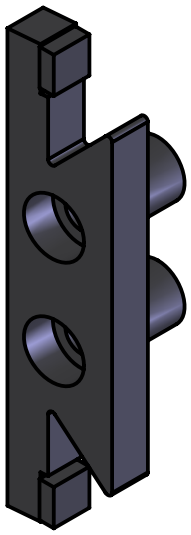

Type:	Wedge 4
Function:	Securing the door leaf during travel by means of shape (used in couple with Wedge3 - 3_6_3_3)
Materials:	Cast iron
Connection:	2 screws M8 through the wedge body
Working position:	Vertical

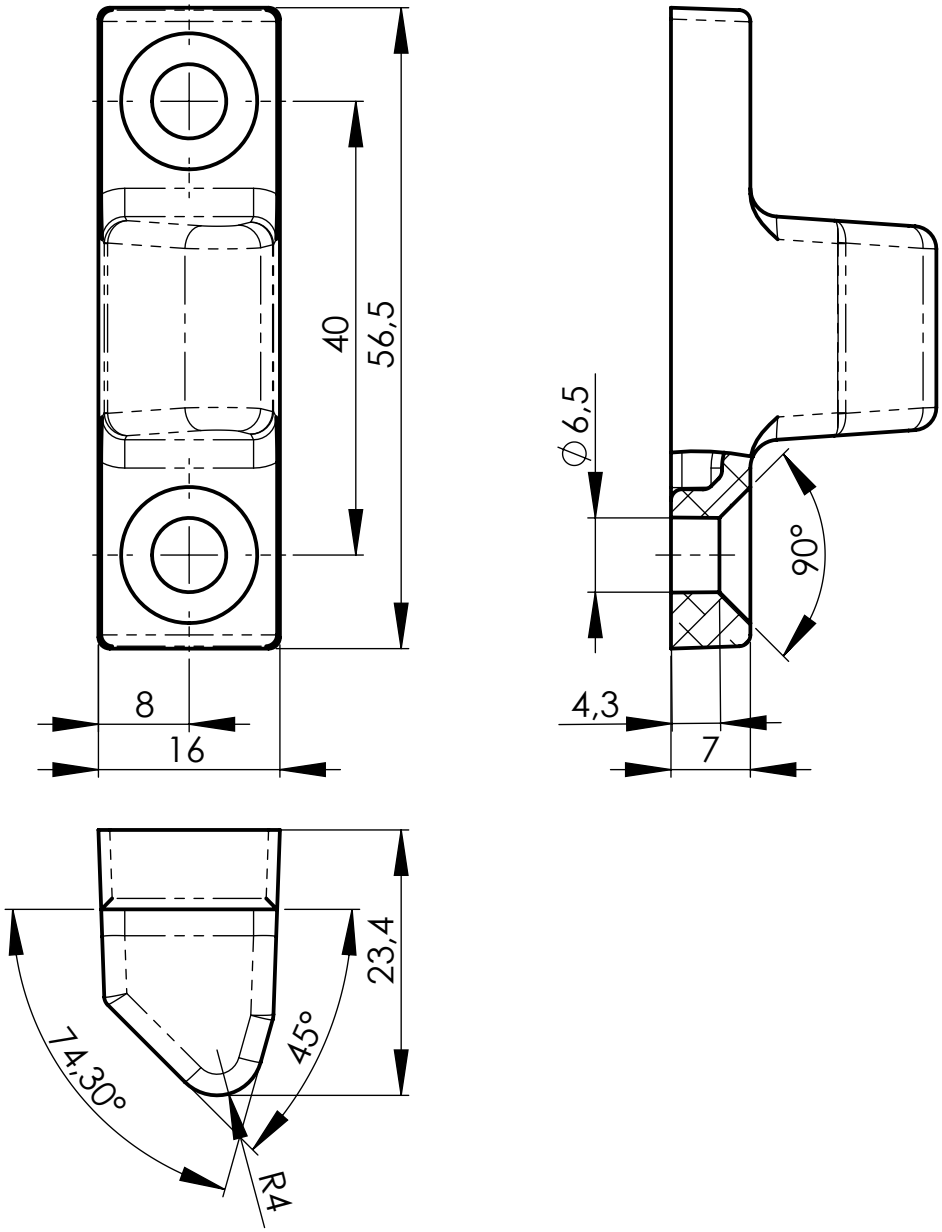

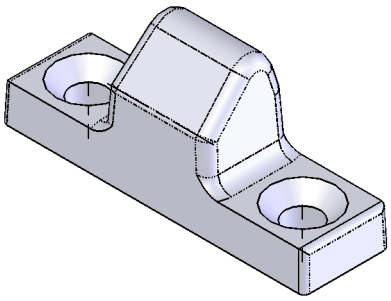

Type:	Leaf wedge
Function:	Securing the door leaf during travel by means of shape (used in couple with Upper wedge 3_6_3_6)
Materials	Zinc alloy
Connection:	2x screw M6throught the wedge body
Working position:	Horizontal (on the upper edge of the door leaf)

23411468 - LEAF WEDGE

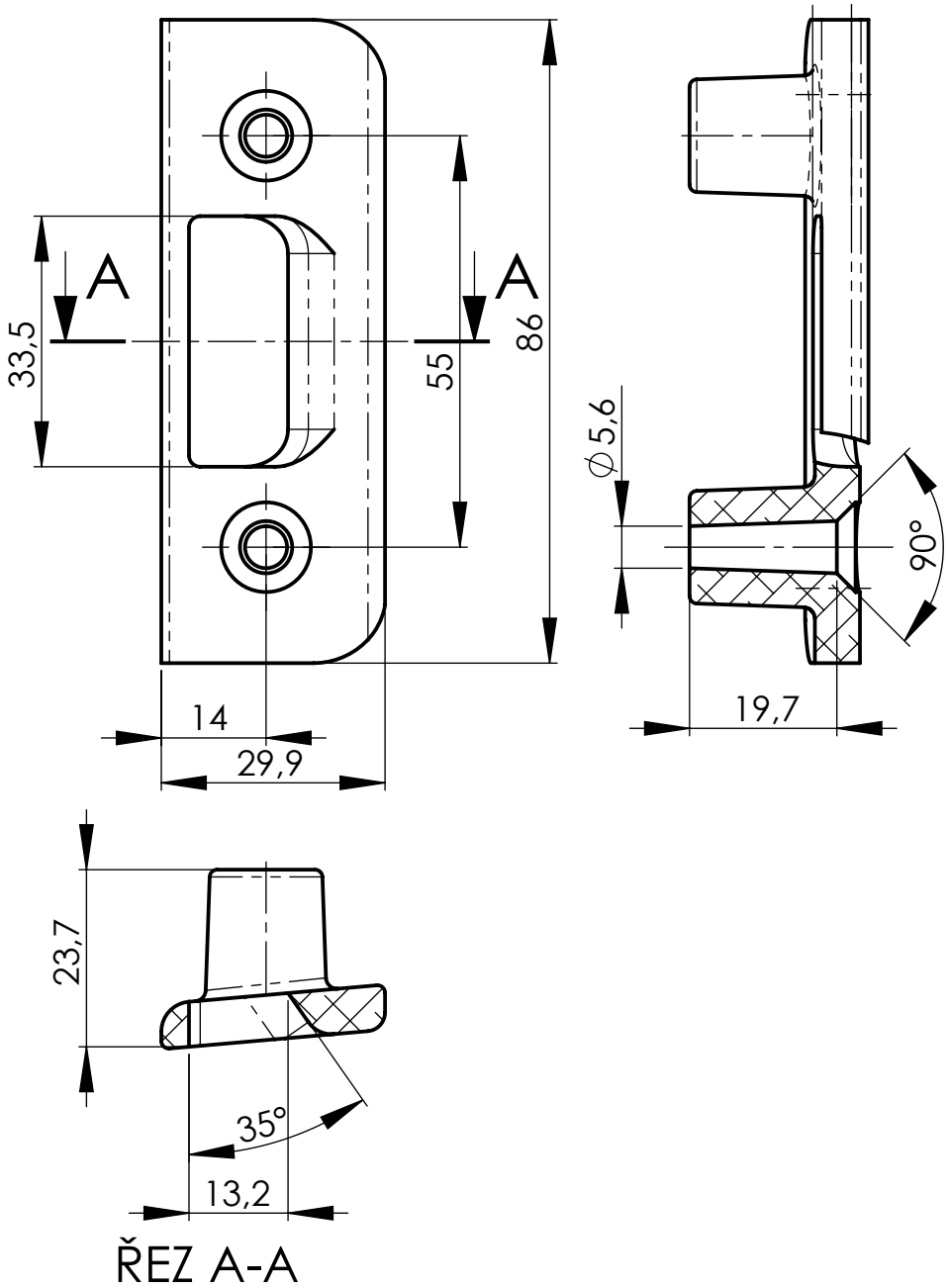

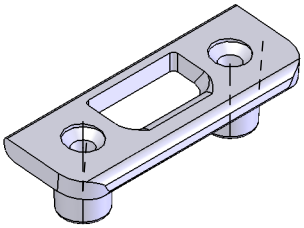

Type:	Upper wedge
Function:	Securing the door leaf during travel by means of shape (used in couple with Leaf wedge 3_6_3_5)
Materials	Zinc alloy
Connection:	2x screw M5 throught the wedge body
Working position:	Horizontal (on the upper edge of the door frame)

23411602 - UPPER WEDGE

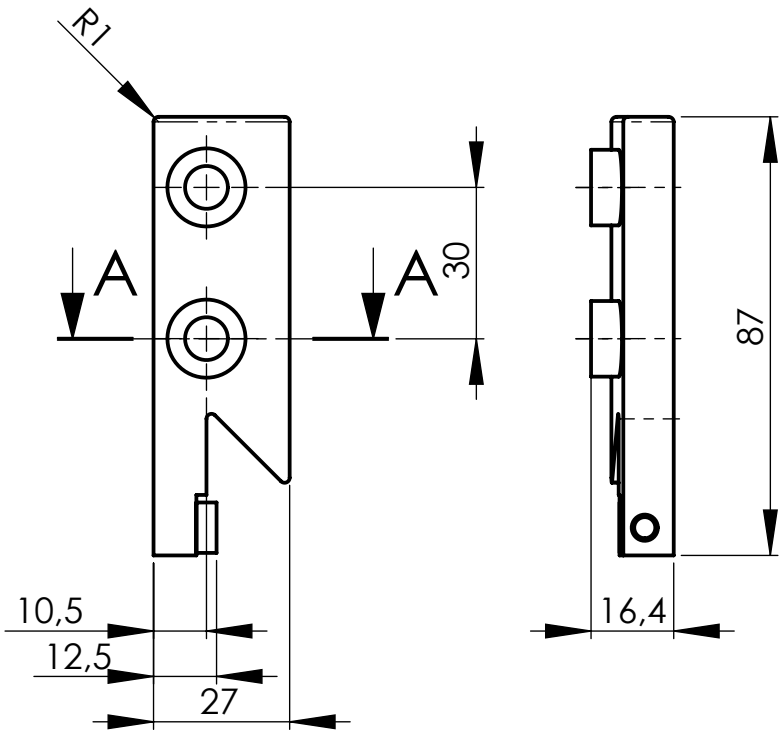

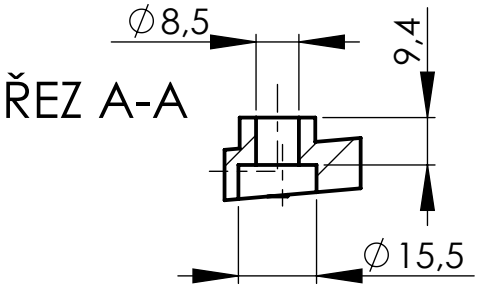

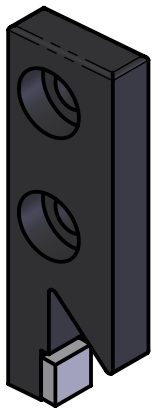

Type:	Wedge 5
Function:	Securing the door leaf during travel by means of shape (used in couple with Wedge3 - 3_6_3_3)
Materials:	Cast iron
Connection:	2 screws M8 through the wedge body
Working position:	Vertical

23410563 - WEDGE 5

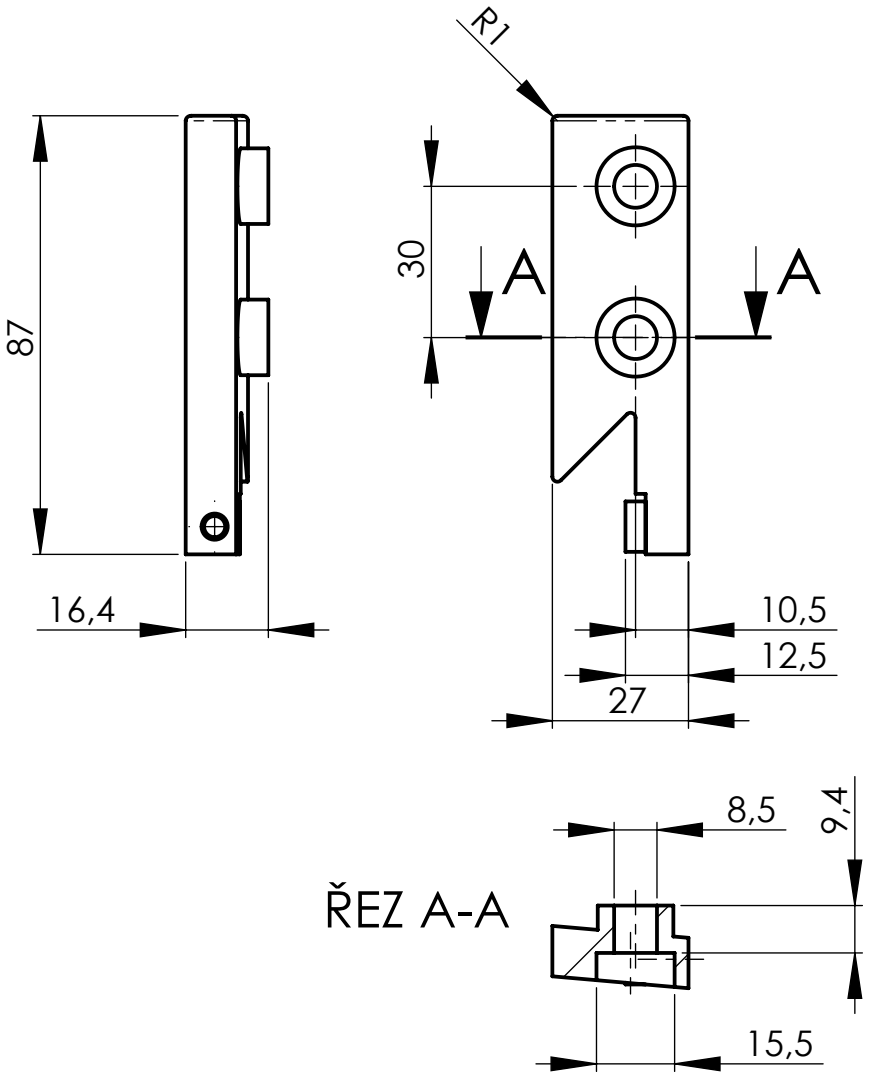

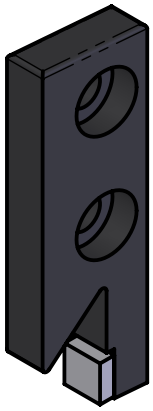

Type:	Wedge 6
Function:	Securing the door leaf during travel by means of shape (used in couple with Wedge3 - 3_6_3_3)
Materials:	Cast iron
Connection:	2 screws M8 through the wedge body
Working position:	Vertical

23410564 - WEDGE 6