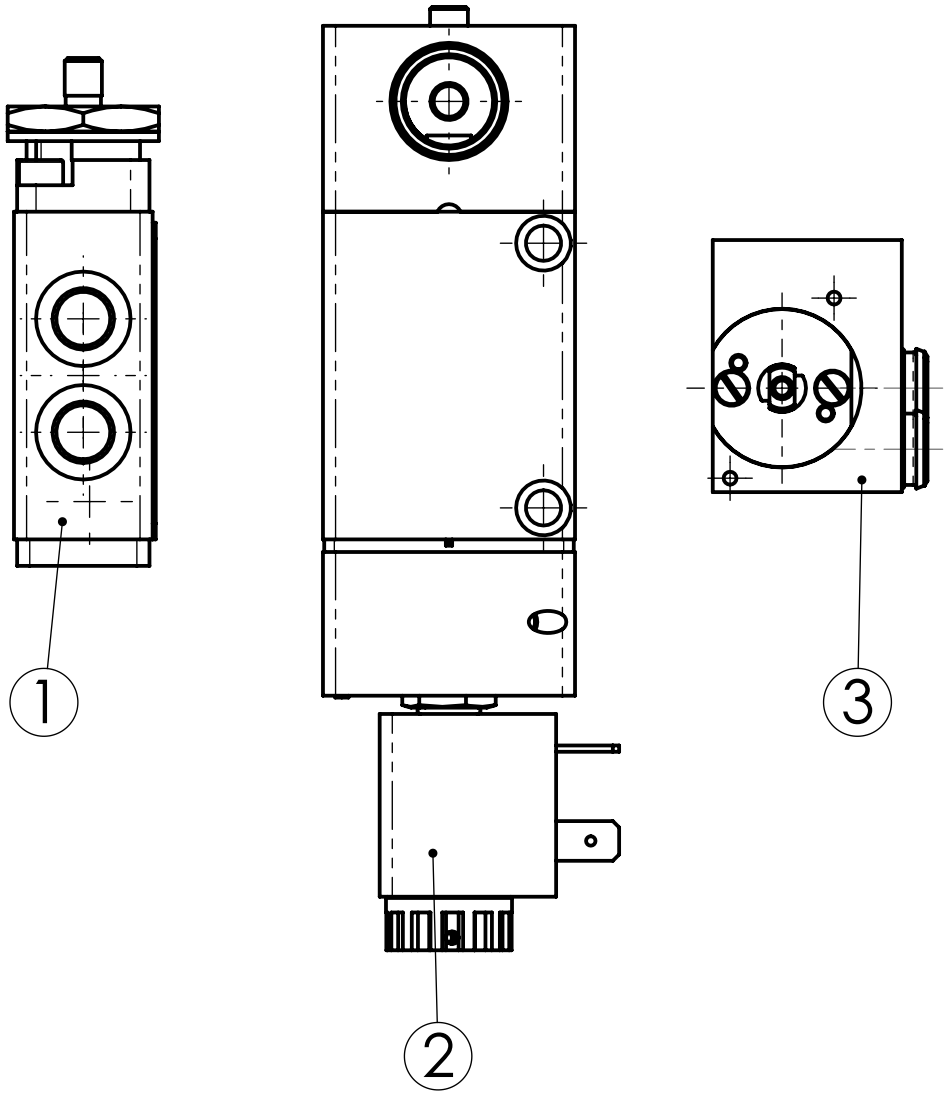


| Pos. | Page | Name |
|---|---|---|
| 1 | 3_1_2_1 | SLIDE VALVES B9356 3/2 - 1/8 |
| 2 | 3_1_2_2 | EMERGENCY VALVE B9357- 3/2 - 1/8 |
| 3 | 3_1_2_3 | ROTARY VALVES KDU 3/2-6/4 |

| | |
|---|---|
| Type: | Emergency valves |
| Function: | In combination with control block secure emergency opening of the door. |

NEXT

# EMERGENCY VALVES

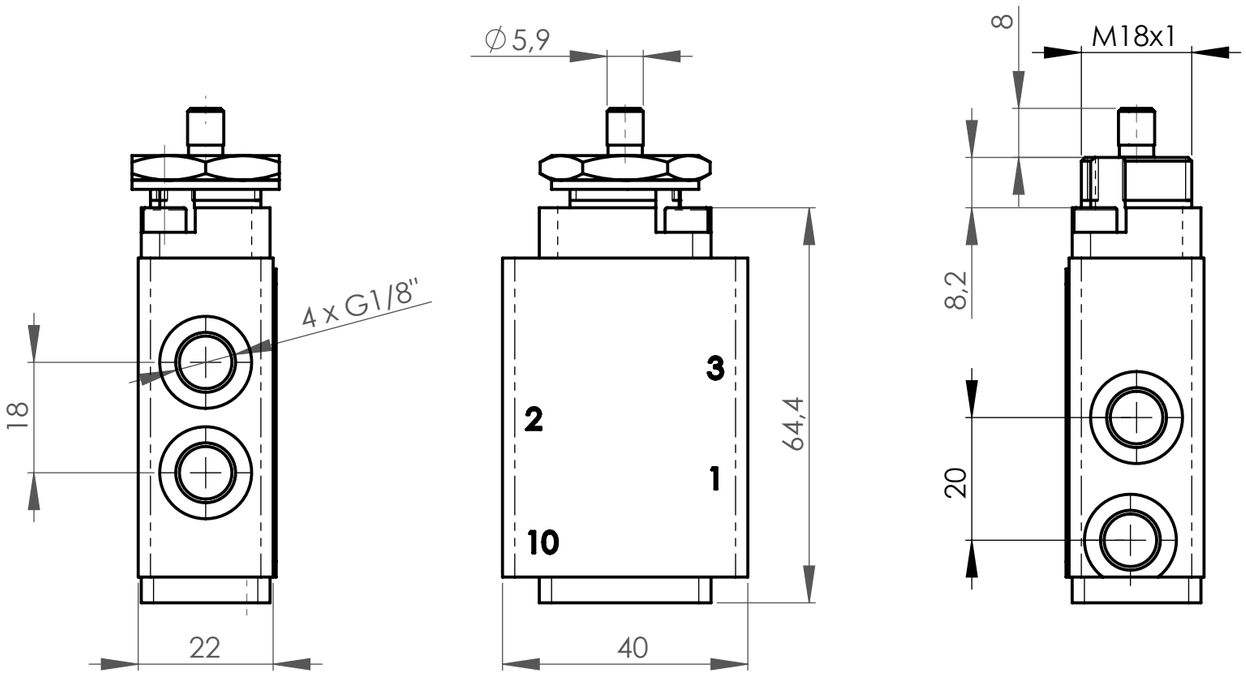


| Supplied configurations | | | | | | | | |
|---|---|---|---|---|---|---|---|---|
| Nr. | Ord. Nr. | Name | Fitting type, ∅ Tube | | | | Button | |
| | | | 1 | ∅ | 2 | ∅ | ∅16 | ∅30 |
| 1 | 23411125 | VALVE B9356 3/2 - 1/8 I | | 8 | | 8 | | |
| 2 | 23411126 | VALVE B9356 3/2 - 1/8 E | | 6 | | 8 | | |
| 3 | 23412017 | VALVE B9356 3/2 - 1/8 EK | | 6 | | 8 | | |
| 4 | 23412564 | VALVE B9356 3/2 - 1/8 | | G 1/8" | | G 1/8" | | |
| 5 | 23412570 | VALVE B9356 3/2 - 1/8 - 16 | | G 1/8" | | G 1/8" | | |
| 6 | 23412571 | VALVE B9356 3/2 - 1/8 - 30 | | G 1/8" | | G 1/8" | | |

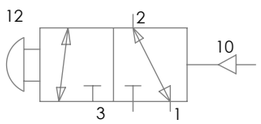


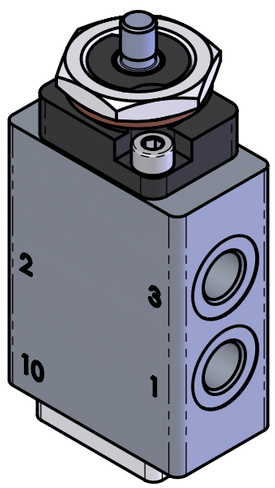


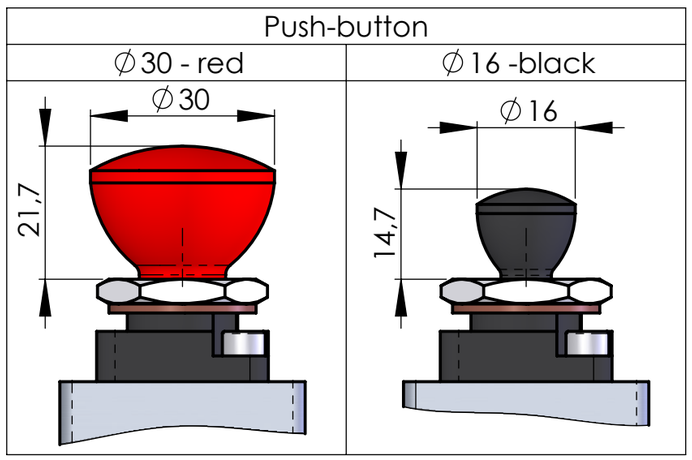


| | |
|---|---|
| Type: | Valve B9356 3/2 - 1/8 |
| Function: | Air reversed valve. Used for emergency opening in combination with a control block. |
| Design: | Cylindrical slide |
| Materials: | Al alloy, brass, steel, plastics, oil resistant rubber, grease. |
| Connection: | Thread M18x1 with nut for connection to sheet metal |
| Medium connection: | Internal thread G1/8" |

# SLIDE VALVES B9356 3/2 - 1/8

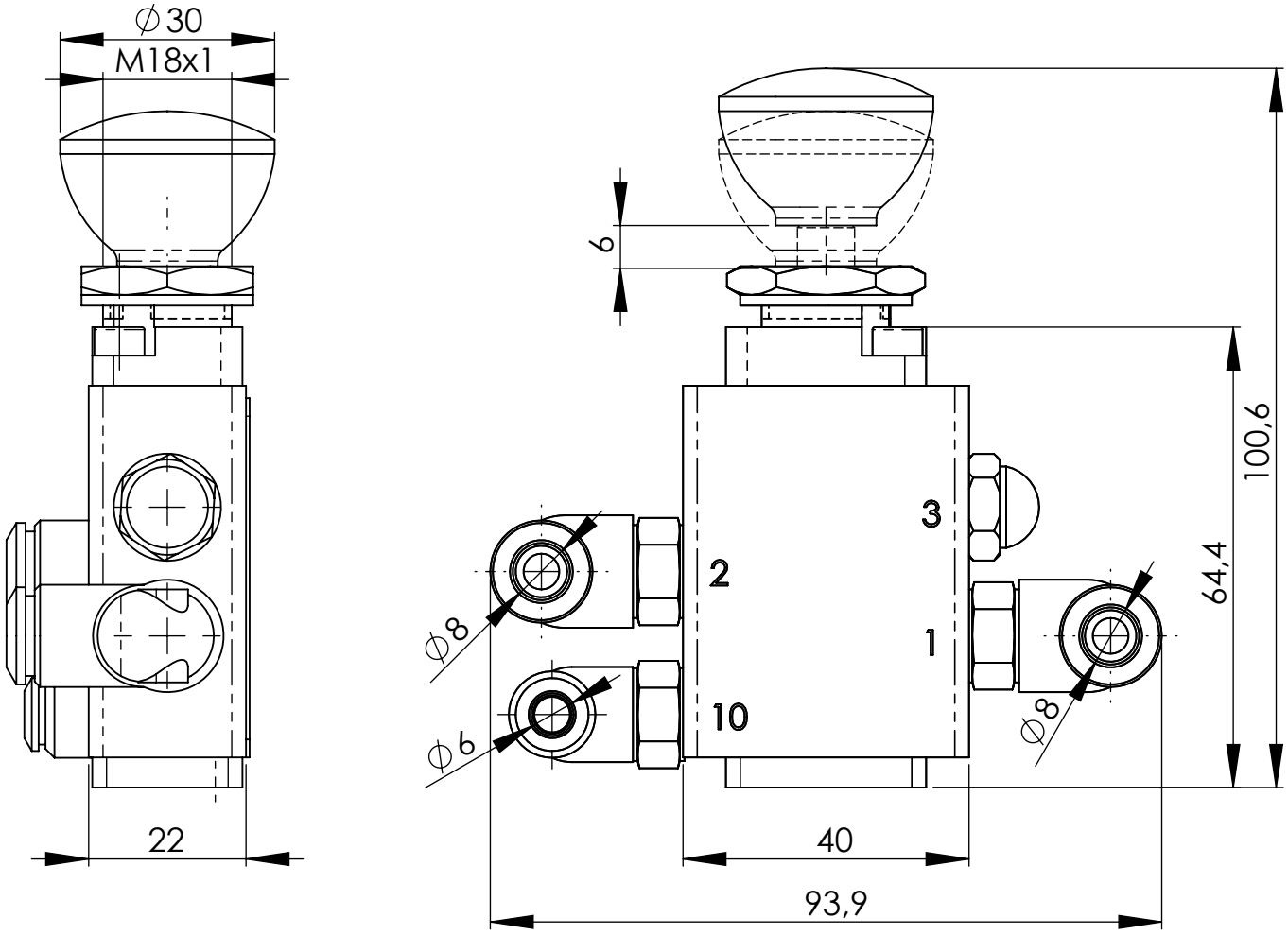


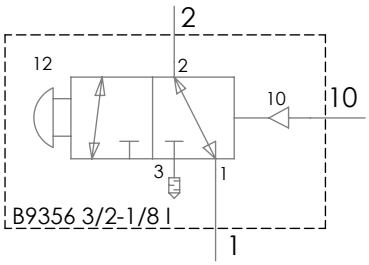


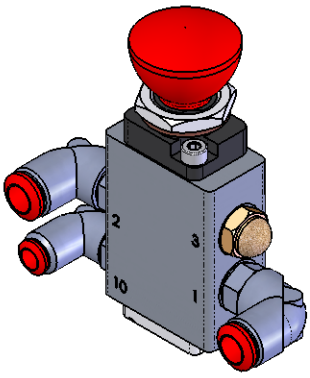


| | |
|---|---|
| Type: | Valve B9356 3/2 - 1/8 I |
| Function: | Air reversed valve. Used for emergency opening in combination with a control block. |
| Design: | Cylindrical gate |
| Materials: | Al alloy, brass, steel, plastics, oil resistant rubber, grease. |
| Connection: | Thread M18x1 with nut for connection to sheet metal |
| Medium connection: | Tubes 8/6, 6/4 |

TOP LEVEL LEVEL UP PREV. NEXT

# 23411125 - VALVE B9356 3/2 - 1/8 I

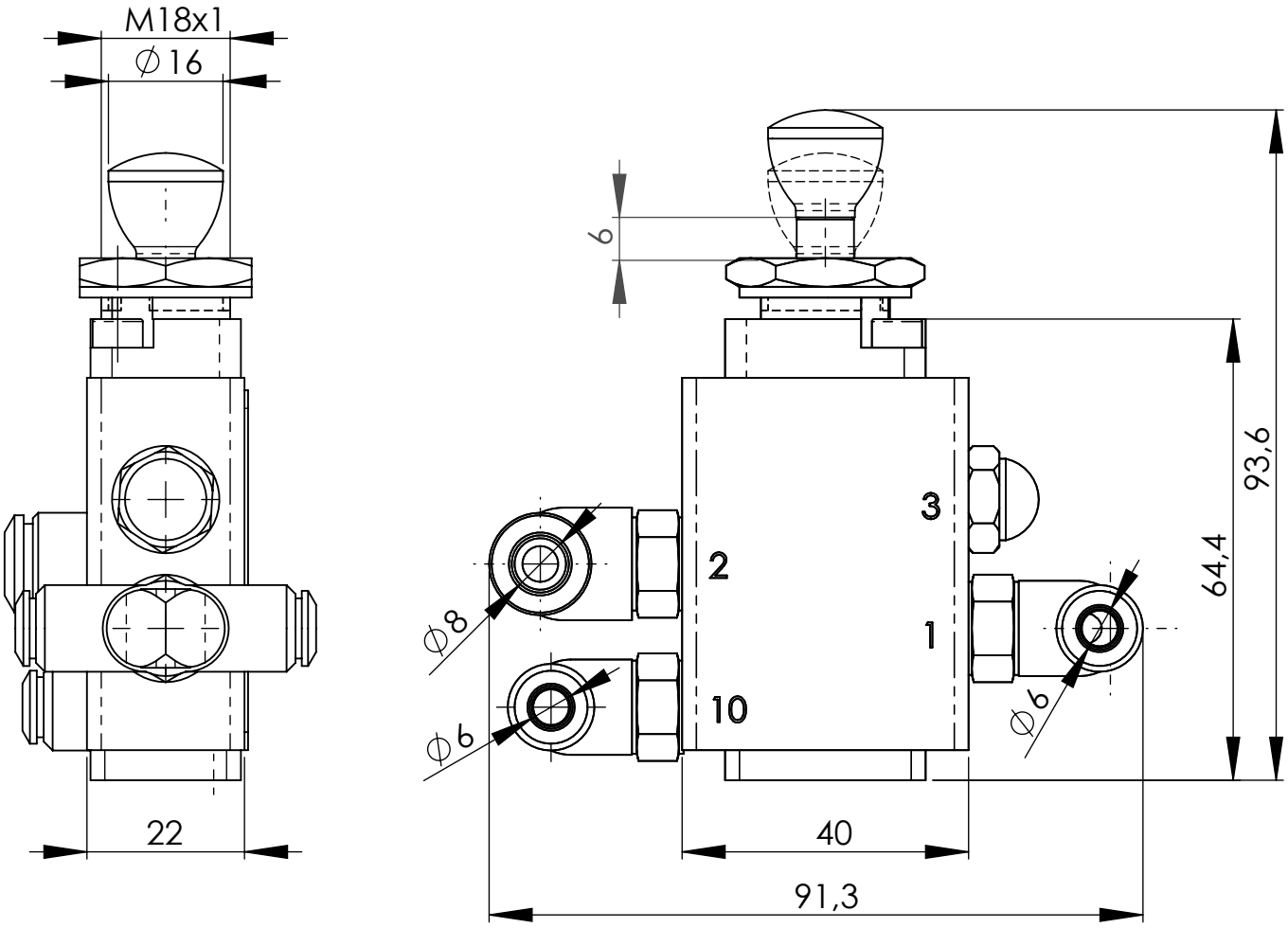


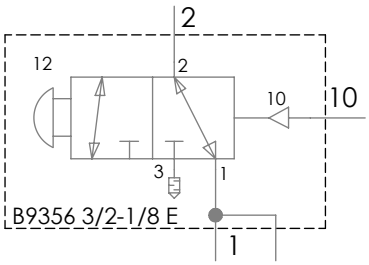


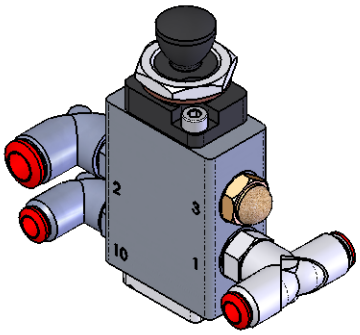


| | |
|---|---|
| Type: | Valve B9356 3/2 - 1/8 E |
| Function: | Air reversed valve. Used for emergency opening in combination with a control block. |
| Design: | Cylindrical slide |
| Materials: | Al alloy, brass, steel, plastics, oil resistant rubber, grease. |
| Connection: | Thread M18x1 with nut for connection to sheet metal |
| Medium connection: | Tubes 8/6, 6/4 |

TOP LEVEL
LEVEL UP
PREV.
NEXT

# 23411126 - VALVE B9356 3/2 - 1/8 E

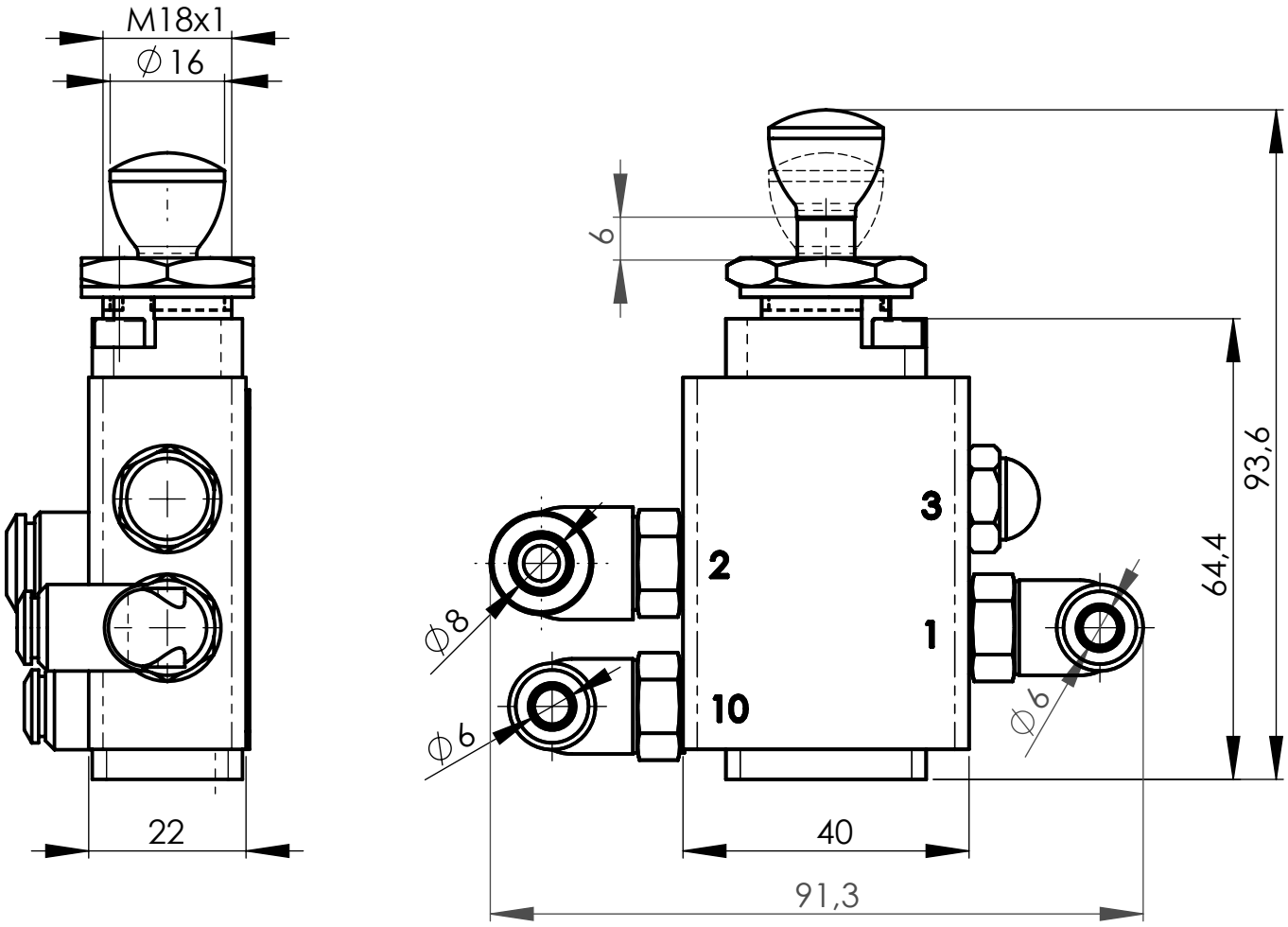


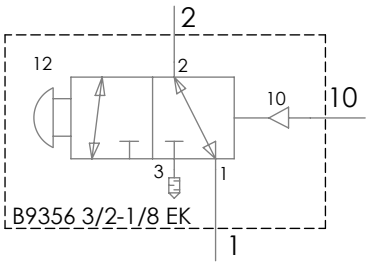


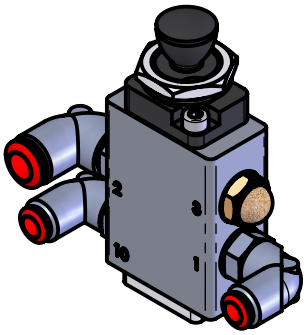

| | |
|---|---|
| Type: | Valve B9356 3/2 - 1/8 E |
| Function: | Air reversed valve. Used for emergency opening in combination with a control block. |
| Design: | Cylindrical slide |
| Materials: | Al alloy, brass, steel, plastics, oil resistant rubber, grease. |
| Connection: | Thread M18x1 with nut for connection to sheet metal |
| Medium connection: | Tubes 8/6, 6/4 |

TOP LEVEL LEVEL UP PREV. NEXT

# 23412017 - VALVE B9356 3/2 - 1/8 EK

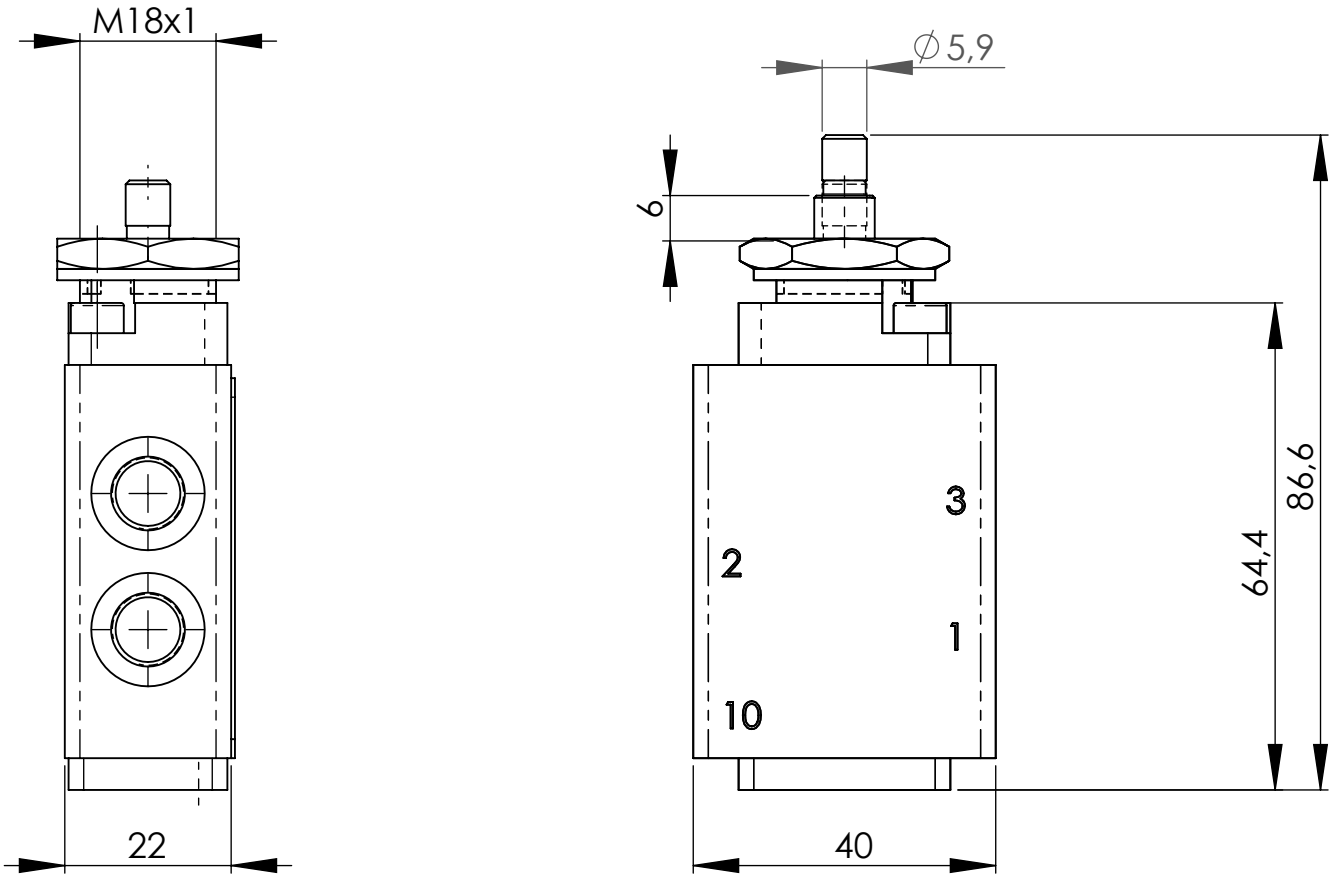


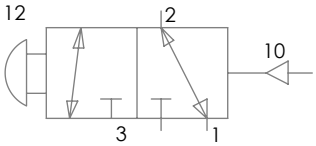


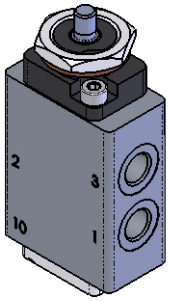


| | |
|---|---|
| Type: | Valve B9356 3/2 - 1/8 |
| Function: | Air reversed valve. Used for emergency opening in combination with a control block. |
| Design: | Cylindrical gate |
| Materials: | Al alloy, brass, steel, plastics, oil resistant rubber, grease. |
| Connection: | Thread M18x1 with nut for connection to sheet metal |
| Medium connection: | Internal thread g1/8" |

TOP LEVEL
LEVEL UP
PREV.
NEXT

# 23412564 - VALVE B9356 3/2 - 1/8

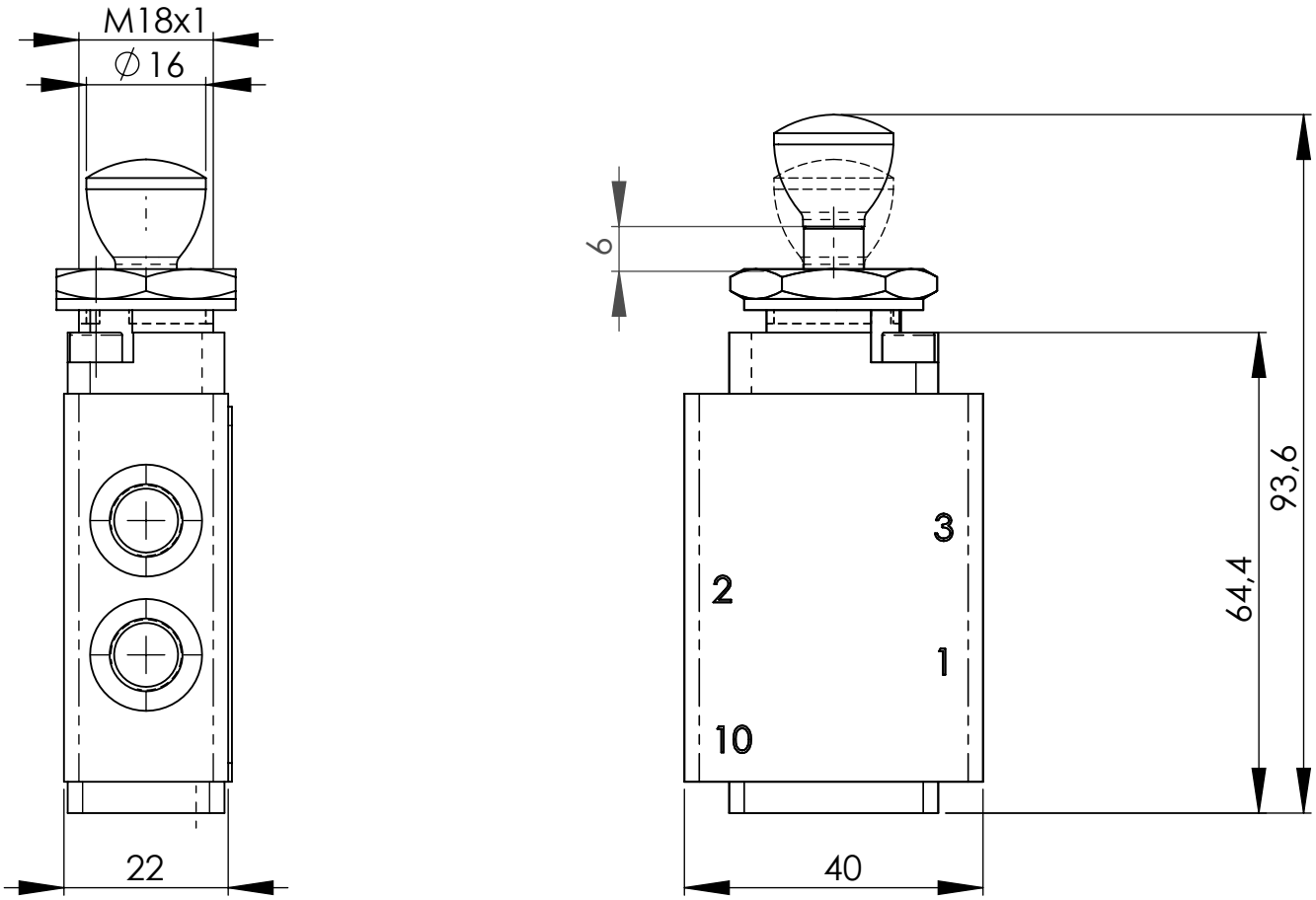


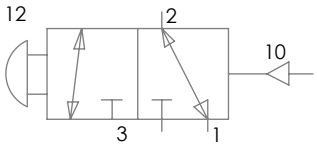


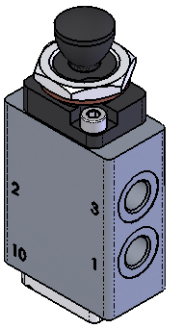


| | |
|---|---|
| Type: | Valve B9356 3/2 - 1/8 E |
| Function: | Air reversed valve. Used for emergency opening in combination with a control block. |
| Design: | Cylindrical slide |
| Materials: | Al alloy, brass, steel, plastics, oil resistant rubber, grease. |
| Connection: | Thread M18x1 with nut for connection to sheet metal |
| Medium connection: | Internal thread G1/8" |

TOP LEVEL
LEVEL UP
PREV.
NEXT

# 23412570 - VALVE B9356 3/2 - 1/8 -16

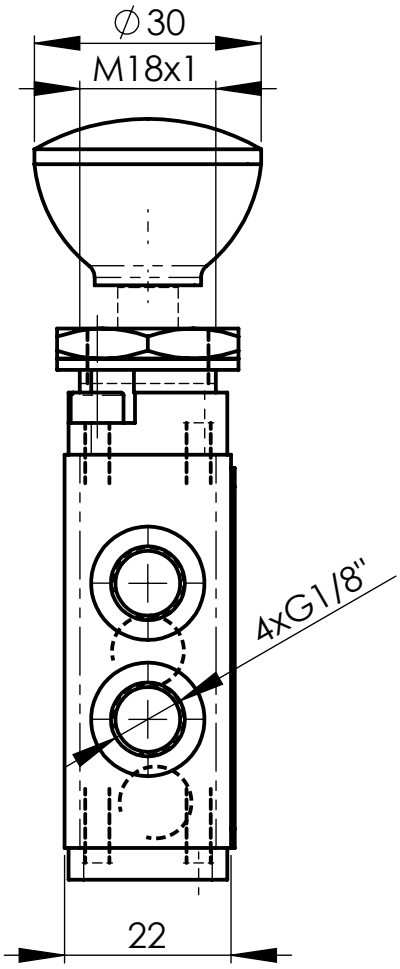


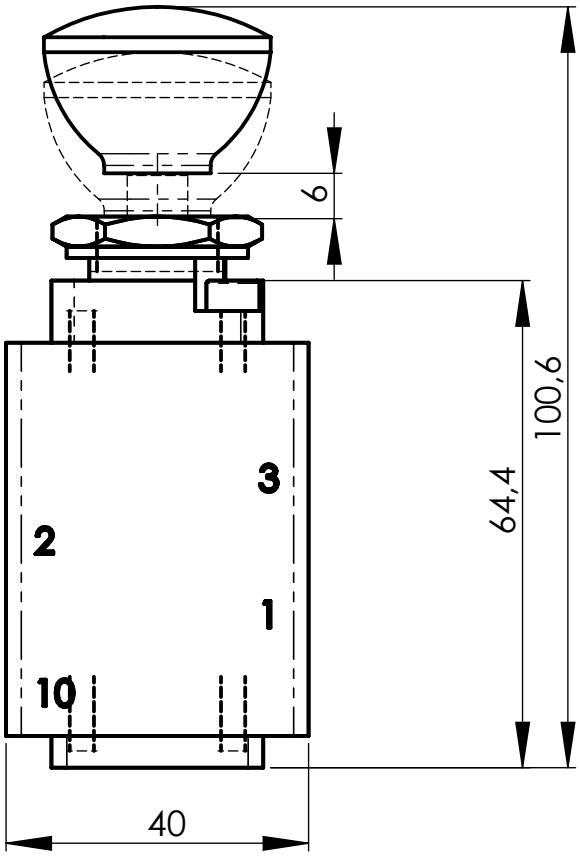


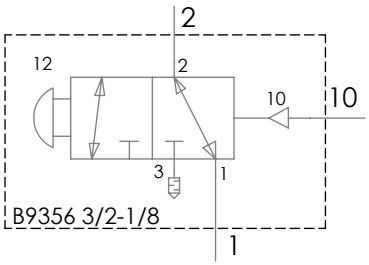


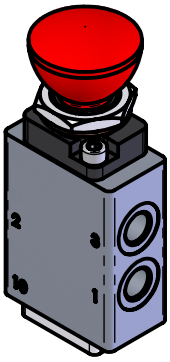

| | |
|---|---|
| Type: | Valve B9356 3/2 - 1/8 30 |
| Function: | Air reversed valve. Used for emergency opening in combination with a control block. |
| Design: | Cylindrical gate |
| Materials: | Al alloy, brass, steel, plastics, oil resistant rubber, grease. |
| Connection: | Thread M18x1 with nut for connection to sheet metal |
| Medium connection: | Internal threads G1/8" |

TOP LEVEL
LEVEL UP
PREV.
NEXT

# 23412571 - VALVE B9356 3/2 - 1/8 - 30

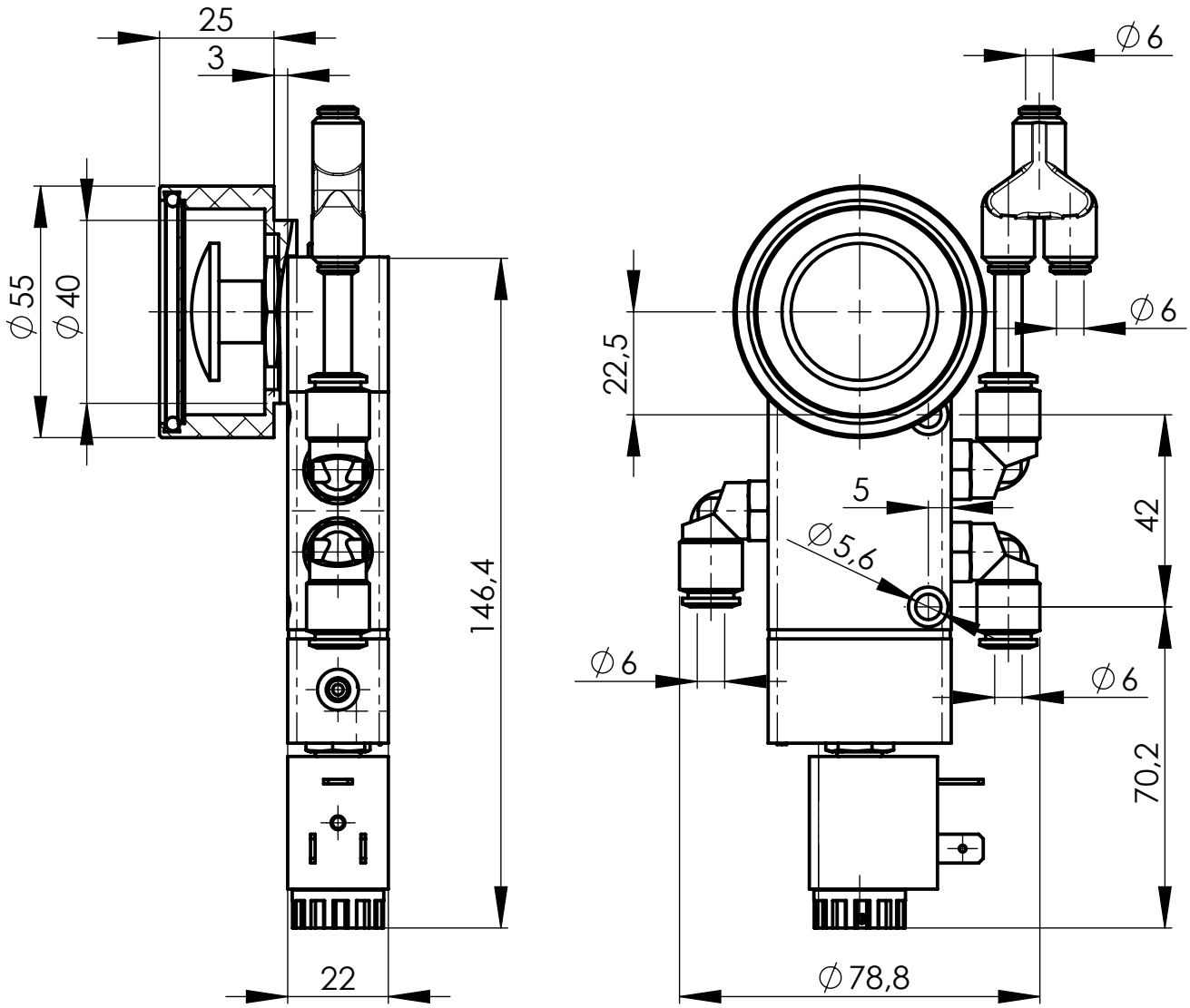


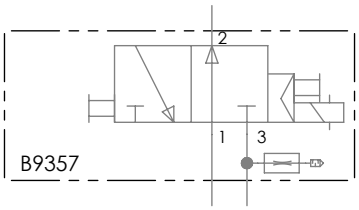


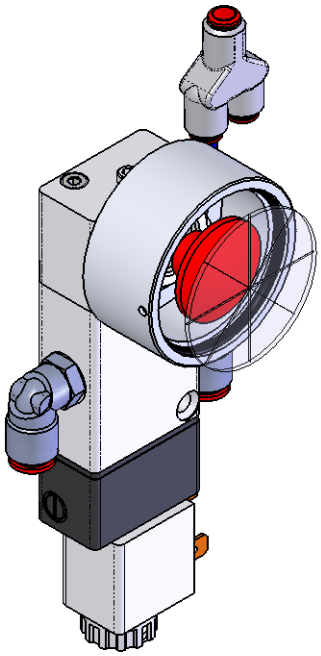

| | |
|---|---|
| Type: | Valve B9357 3/2 - 1/8 with covering |
| Function: | Push-button operated valve. Reversed by electrical signal. Used for emergency opening in combination with a control block. |
| Design: | Cylindrical gate |
| Materials: | Al alloy, brass, steel, plastics, oil resistant rubber, grease. |
| Connection: | Thread M18x1 with nut for connection to sheet metal |
| Medium connection: | Tubes 6/4 |

# 23415510 - EMERGENCY VALVE B9357- 3/2 - 1/8 WITH COVERING

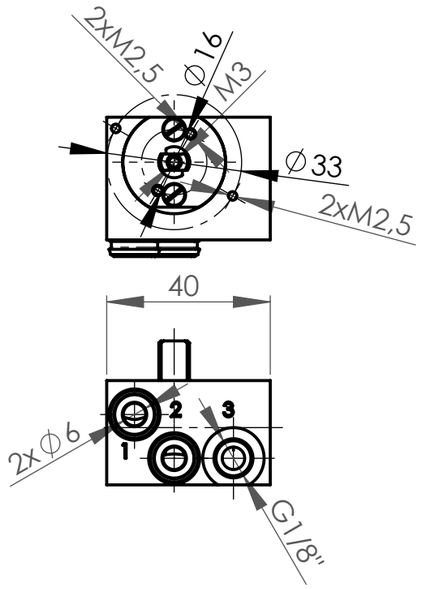


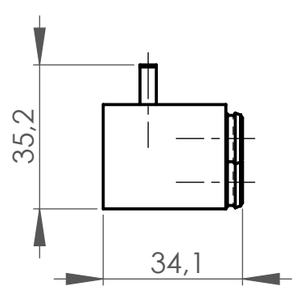


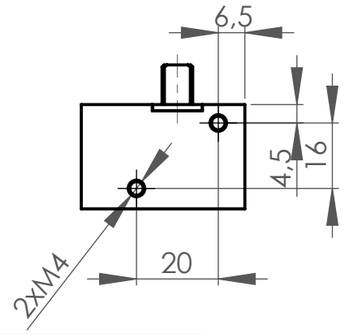


| Supplied configurations | | | | | | | | |
|---|---|---|---|---|---|---|---|---|
| Nr. | Ord. Nr. | Name | Fitting | | Accessories | | | |
| | | | O | V | Z | K | P | S |
| 1 | 23300810 | VALVE KDU 3/2 VKP | | | | | | |
| 2 | 23412511 | VALVE KDU 3/2 VK | | | | | | |
| 3 | 23412520 | VALVE KDU 3/2 VZPS | | | | | | |
| 4 | 23412513 | VALVE KDU 3/2 VZP | | | | | | |
| 5 | 23304220 | VALVE KDU 3/2 V | | | | | | |
| 6 | 23412509 | VALVE KDU 3/2 O | | | | | | |
| 7 | 23304374 | VALVE KDU 3/2 OK | | | | | | |

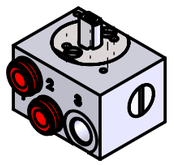

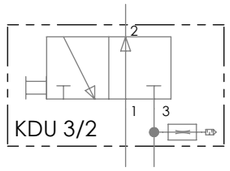


Fitting

| O - exhaust | V - exhaust |
|---|---|
| 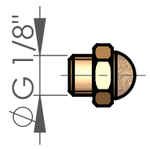 | 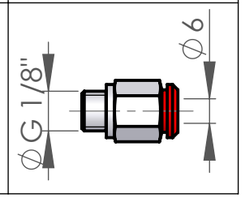 |





Accessories

| Z - Recess - ABS | K - Cover - Al. alloy | P - Lever | S - Glass |
|---|---|---|---|
| 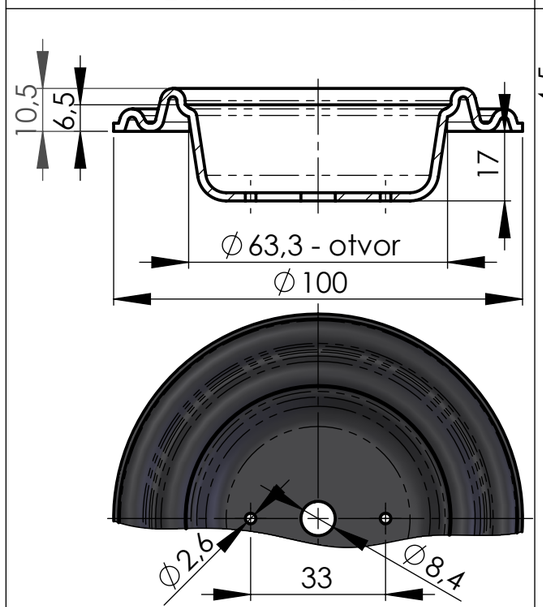 | 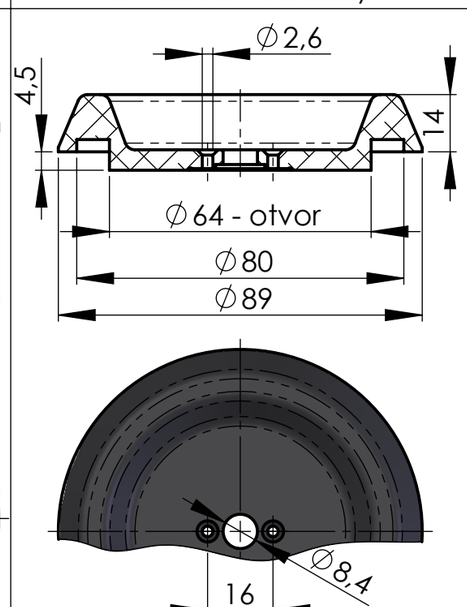 | 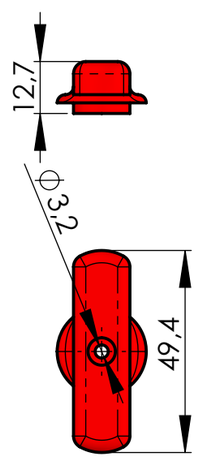 | 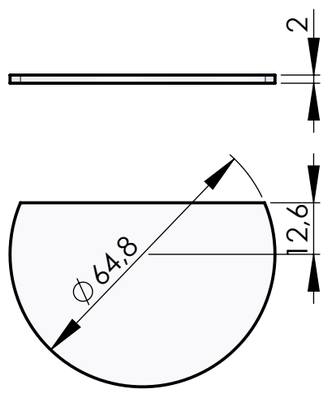 |









| | |
|---|---|
| Type: | Valve KDU 3/2 - 1/8 |
| Function: | Rotary valve. Used for emergency opening in combination with a control block. |
| Connection: | 2x Thread M2,5 |
| Medium connection: | Tubes 6/4, thread G1/8" |
| Operation: | By lever |

# ROTARY VALVES KDU 3/2-6/4

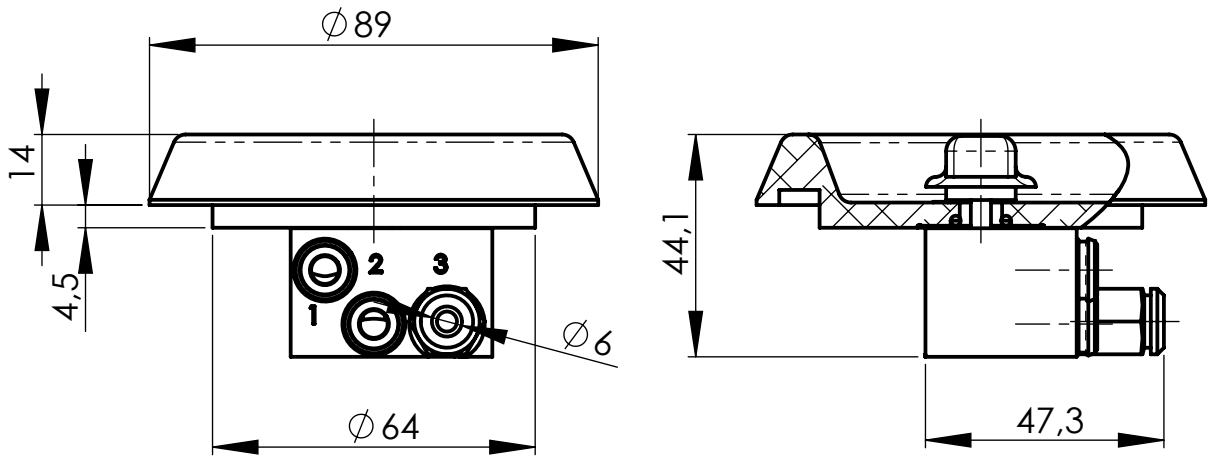


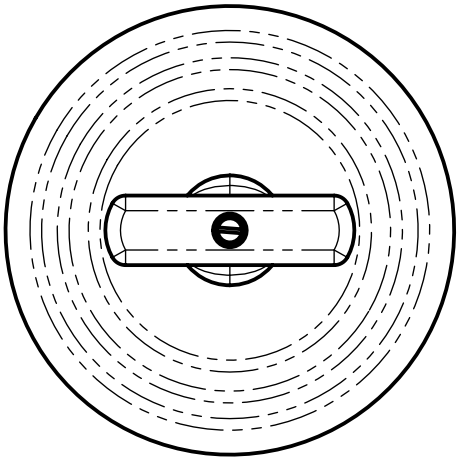

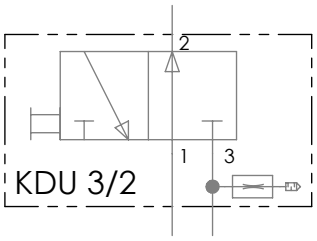


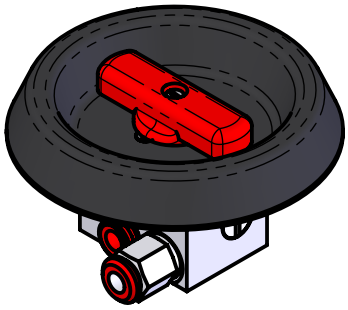

| | |
|---|---|
| Type: | Valve KDU 3/2 - 6/4 VKP |
| Function: | Used as an emergency valve, in combination with a control block. |
| Connection: | By sealant to a groove in the cap on the body |
| Medium connect.: | Tube 6/4 |
| Operating: | By lever |

# 23300810 - ROTARY VALVE KDU 3/2-6/2 VKP

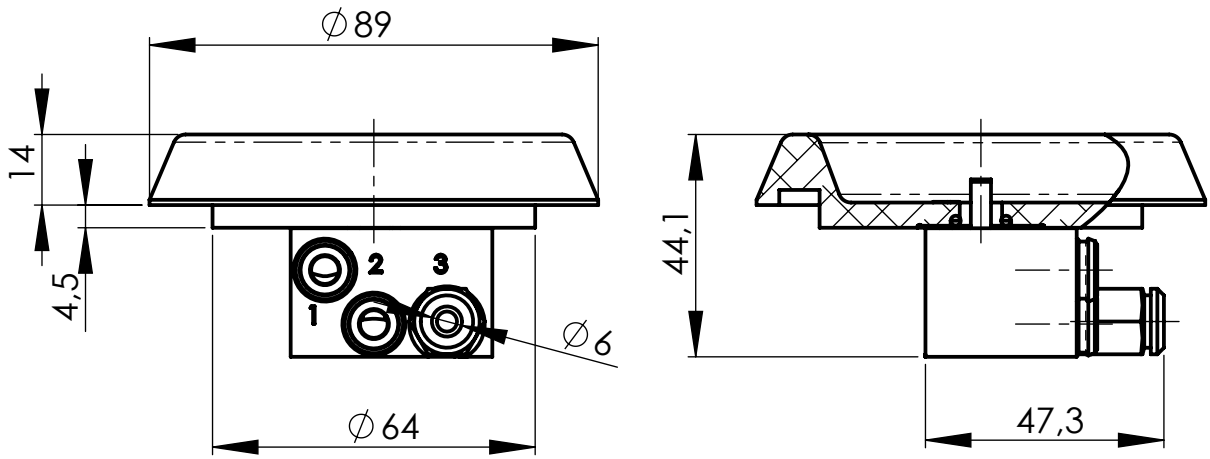


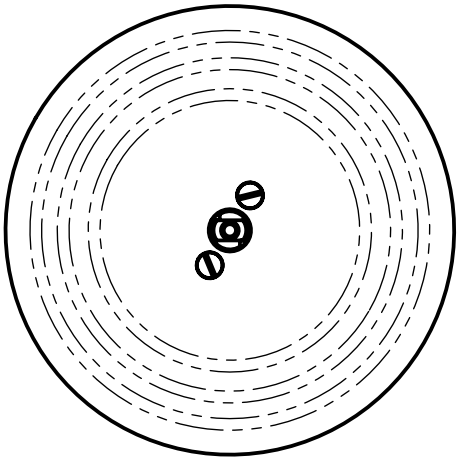

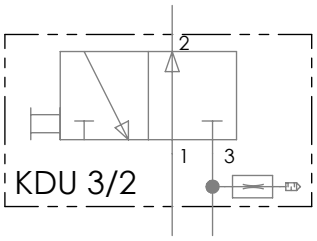


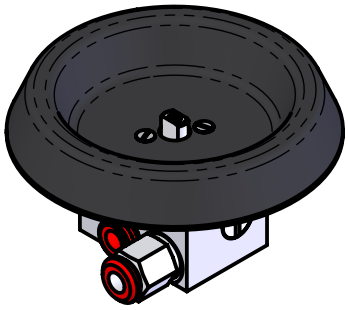

| | |
|---|---|
| Type: | Valve KDU 3/2 - 6/4 VK |
| Function: | Used as an emergency valve, in combination with a control block. |
| Connection: | By sealant to a groove in the cap on the body |
| Medium connect.: | Tube 6/4 |
| Operating: | By lever (lever not included) |

# 23412511 - ROTARY VALVE KDU 3/2-6/1 VK

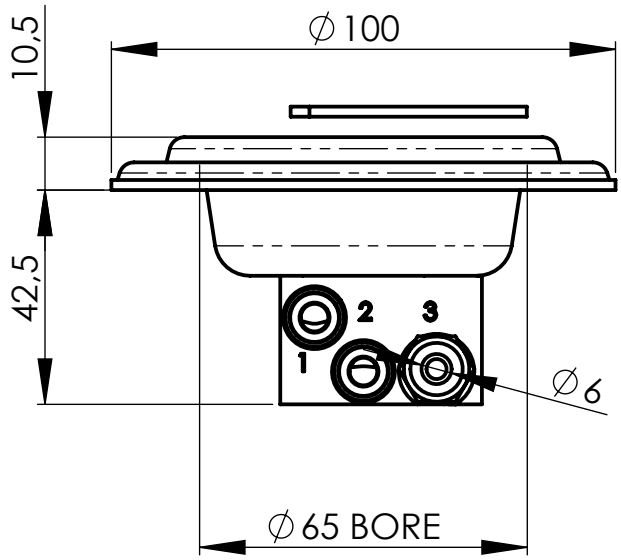


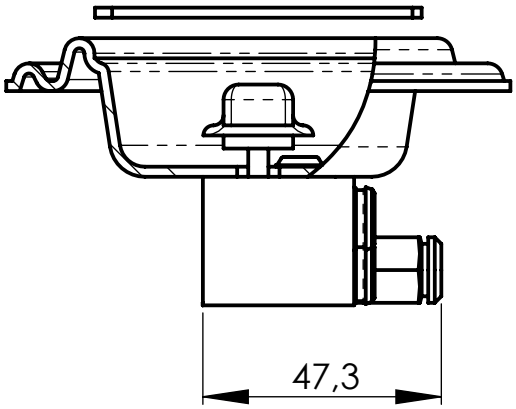


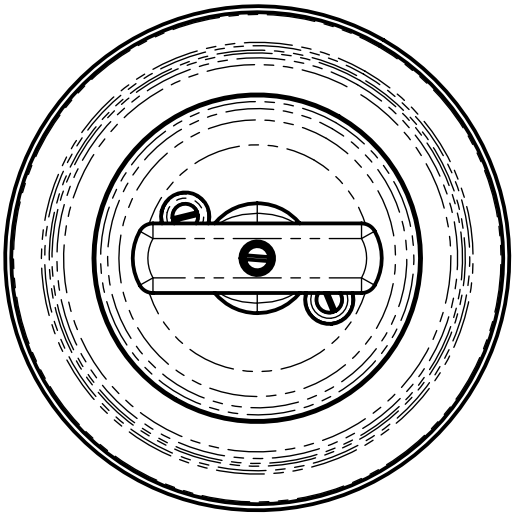

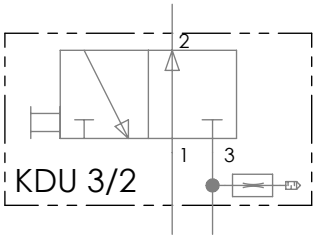


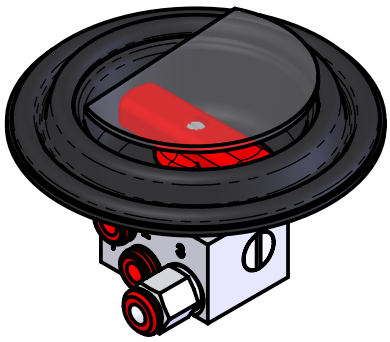

| | |
|---|---|
| Type: | Valve KDU 3/2 - 6/4 VZPS |
| Function: | Used as an emergency valve, in combination with a control block. |
| Connection: | By sealant to a groove in the cap on the body |
| Medium connect.: | Tube 6/4 |
| Operating: | By lever |

# 23412520 - ROTARY VALVE KDU 3/2-6/0 VZPS

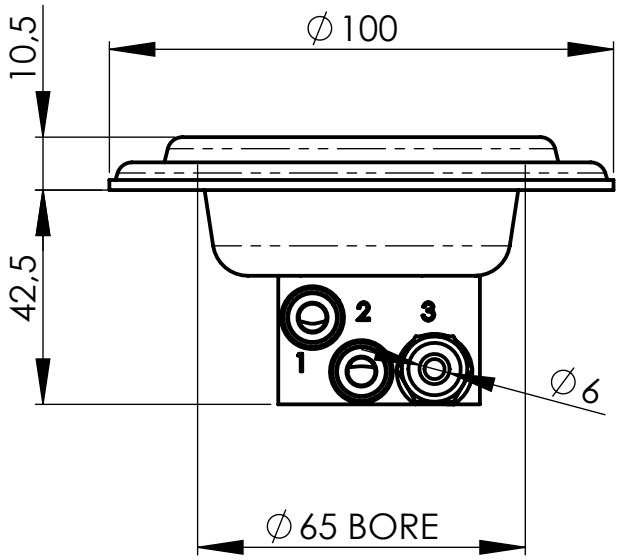


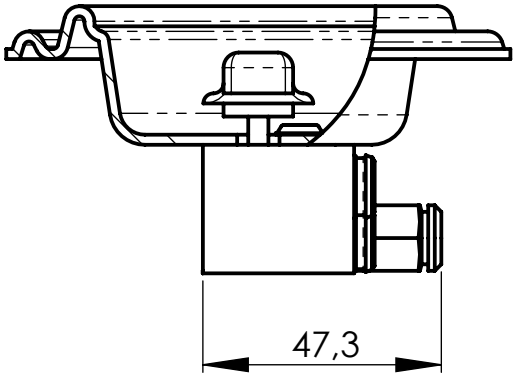


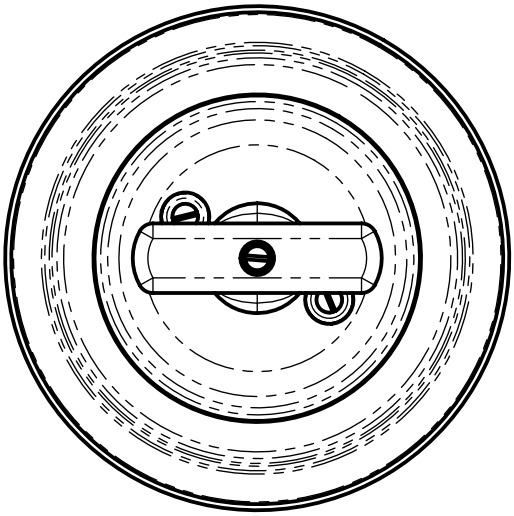

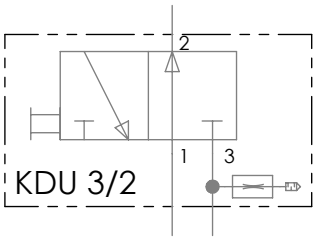


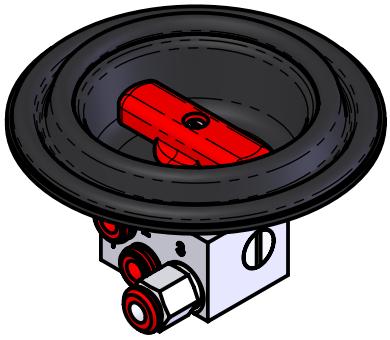

| | |
|---|---|
| Type: | Valve KDU 3/2 - 6/4 VZP |
| Function: | Used as an emergency valve, in combination with a control block. |
| Connection: | By sealant to a groove in the cap on the body |
| Medium connect.: | Tube 6/4 |
| Operating: | By lever |

# 23412513 - ROTARY VALVE KDU 3/2-6/1 VZP

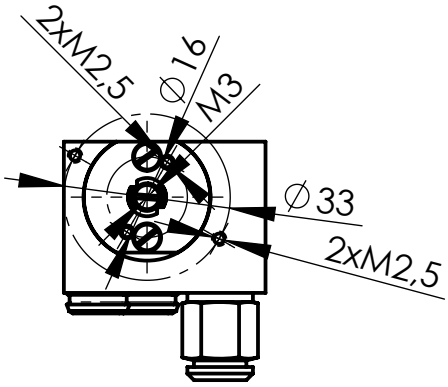


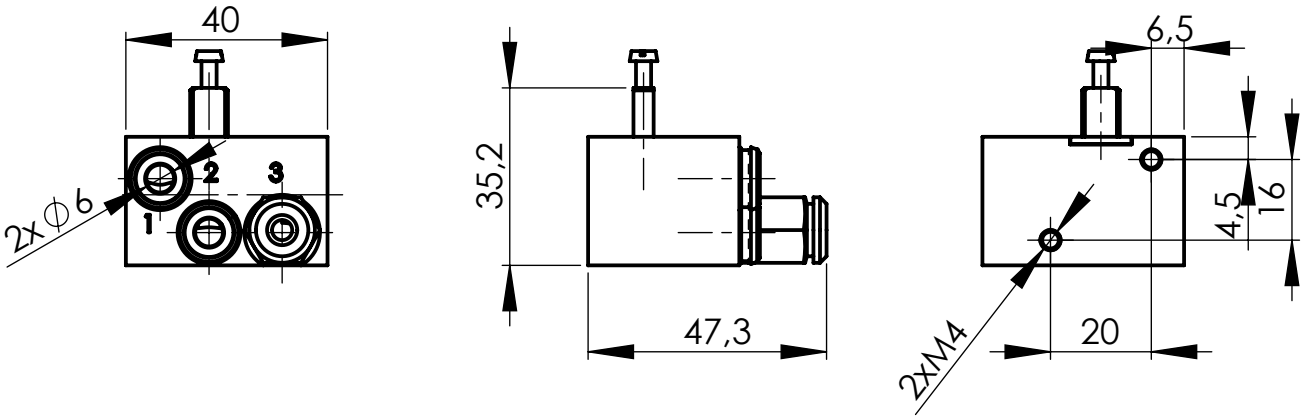


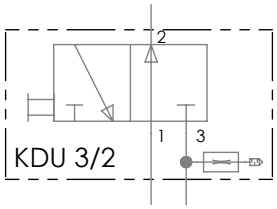


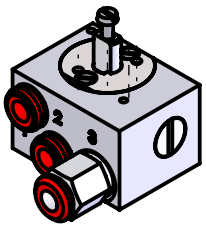

| | |
|---|---|
| Type: | Valve KDU 3/2 - 1/8 |
| Function: | Rotary valve. Used for emergency opening in combination with a control block. |
| Connection: | 2x Thread M2,5; 2x thread M4 |
| Medium connection: | Tubes 6/4 |
| Operation: | By lever (lever not included) |

# 23304220 - ROTARY VALVE KDU 3/2-6/2 V

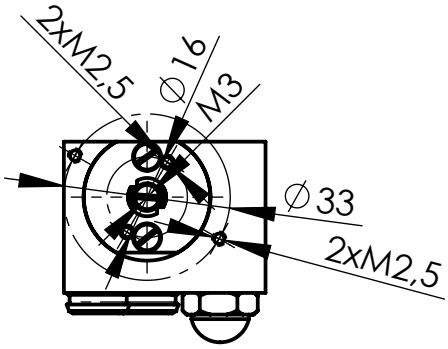


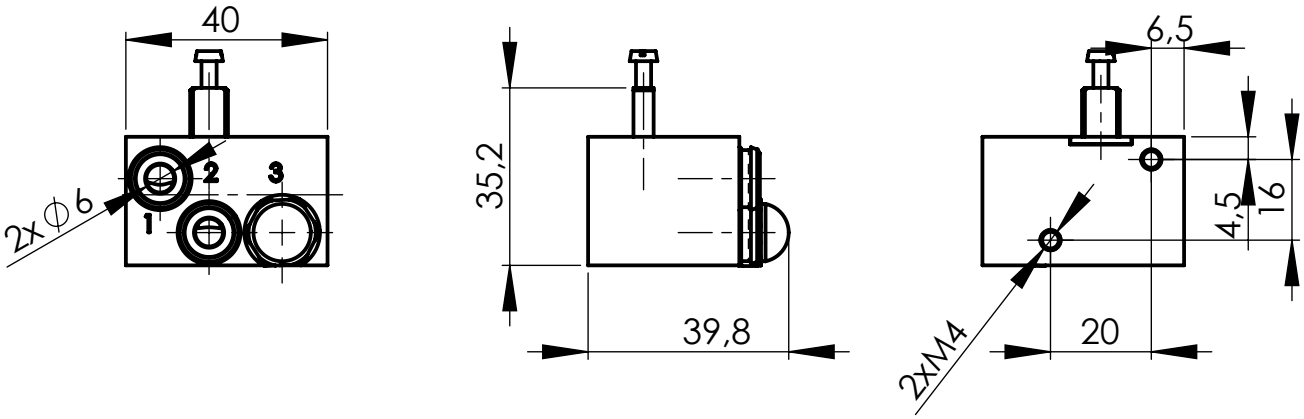


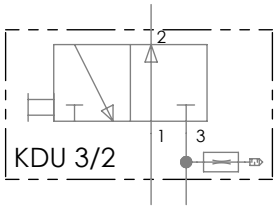


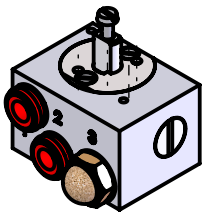

| | |
|---|---|
| Type: | Valve KDU 3/2 - 1/8 O |
| Function: | Rotary valve. Used for emergency opening in combination with a control block. |
| Connection: | 2x Thread M2,5; 2x thread M4 |
| Medium connection: | Tubes 6/4 |
| Operation: | By lever (lever not included) |

# 23412509 - ROTARY VALVE KDU 3/2-6/3 O

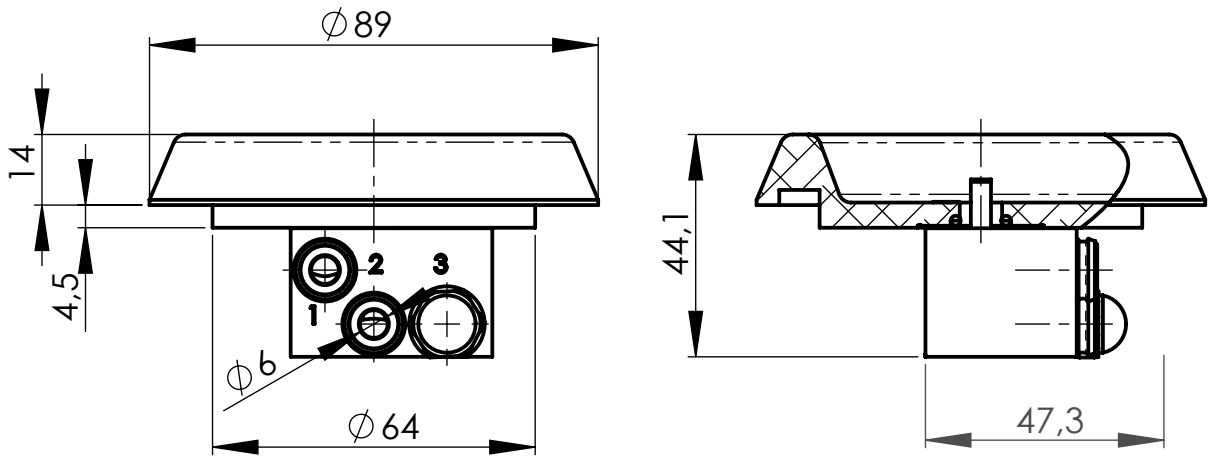


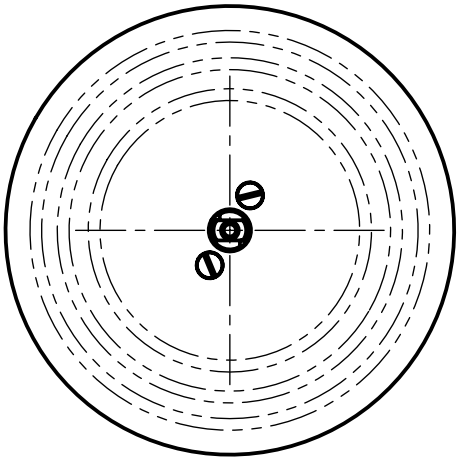

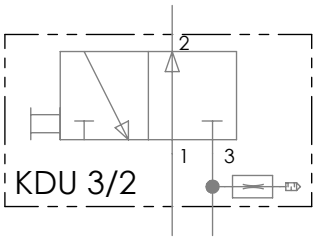


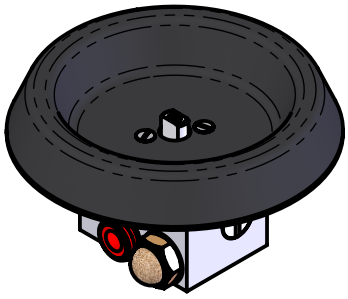

| | |
|---|---|
| Type: | Valve KDU 3/2 - 6/4 OK |
| Function: | Used as an emergency valve, in combination with a control block. |
| Connection: | By sealant to a groove in the cap on the body |
| Medium connect.: | Tube 6/4 |
| Operating: | By lever (lever not included) |

# 23304374 - ROTARY VALVE KDU 3/2-6/4 OK